shat·r·shield

Project			
Date		Type	

IRONCLAD® LINEAR PRO

The Ironclad® Linear Pro fixture is designed to withstand abuse and drastically delay tampering, removal, or damaging of a light fixture within a prison. The unique design completely eliminates the metal housing in current style fixtures which can be used to make weapons. The fixture uses a specially engineered 0.5” thick steel frame and proprietary 0.5” thick cast low profile lens.There are no areas to hide contraband or open the fixture. The optional count/night light LED module can be turned on and off as needed depending on the application of the area being used.

Manufactured in America with globally and domestically sourced components

Ordering Chart Information

Example: 034-LR-40-CM-Y-VH-S1-UR-00-SA-TS-02

LR-CM-VH-UR-02

Wattage		Fixture	CCT		Mount	Count / Night Light		Voltage	Material		Lens
		LR			CM			VH			UR
034	34 Watts	LR Linear Pro	40	4000K	CM Center	Y	Yes	VH 120 to 277 VAC	S1	Powder Coat, Black	UR Urethane
040	40 Watts		50	5000K		N	No		S2	Powder Coat, White	
045	45 Watts		CR	Circadian Rhythm					S3	Powder Coat, Bronze	
080	80 Watts								SS	Stainless Steel	

Accessory 1		Accessory 2		Accessory 3		Rev
						02
00	None	00	None	00	None	02
JB	14ga Surface Box	SA	Spike Anchors	B1	Separate Battery Backup unit[1]	
J1	Box with one conduit hole	TB	Tamperproof Bolts/Inserts	TS	Touch Switch	
J2	Box with two conduit holes	CF	Cinder Block Fasteners	DM	Dimmable	
J3	JBox-long box for ACSU	MS	Metal Ceiling Screws			
JT	JBox with Thin profile					
AB	Angled Corner Box					
C2	Corner Box (3/8 mounting holes)					
C4	Corner Box with outlet					
1W	1 foot Whip					
2W	2 foot Whip					
SW	Sample Whip					
S2	Sample Whip + Sample Hardware					
LX	10ft 4-wire Whip with Liquatite conduit					

Notes:
1. MIP 100 battery backup will ship separately, not attached to unit

For accessories not shown or custom plates, please contact customer service at (800) 223-0853.

Specifications

Lumens: 3800, 4400, 8500, Count/Night Light: 830 lm
Watts: 40W, 80W
Voltage: 120-277 VAC
Main Light CRI: 80
Night Light CRI: N/A
LED Life: L70>75,000 Hours; Projected>100,000 Hours
Lens: Highly impact-resistant 1/2” thick urethane with a minimum IK10 impact rating
Footcandles: 60 fc at desk level, 30 fc on the floor w/MH 9 ft
Installation: Anchored flush onto ceiling with (8) spike anchors or optional recessed tamper-proof 1/4” stainless steel bolts or cinder block fasteners
Dimensions: 25.8” long x 8.1” wide x 1.8” tall
Color Temperatures: 5000K, 4000K, Count/Night Light: 2700K
Features: No accessible parts or hinges, no maintenance needed, extreme durability, no areas to hide or conceal contraband.
Warranty: 5-year limited warranty. Complete warranty terms located **here.**

Photometric Data

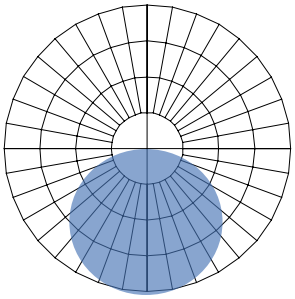

Indoor Report

- Maximum Candela = 2540.82
- Luminaire Lumens = 8542

Dimensional Data

Standard Linear Pro

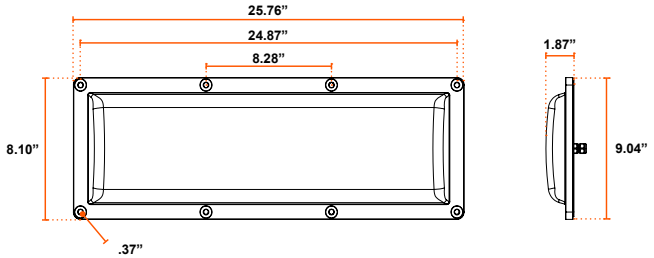

Linear Pro w/ Corrugated Plate

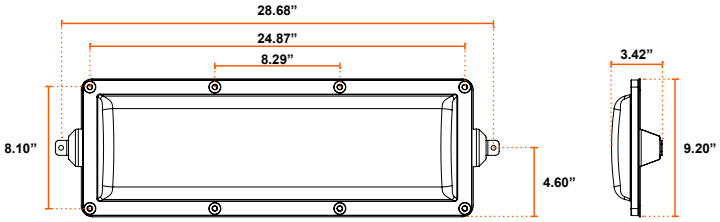

Linear Pro w/ Corner Box

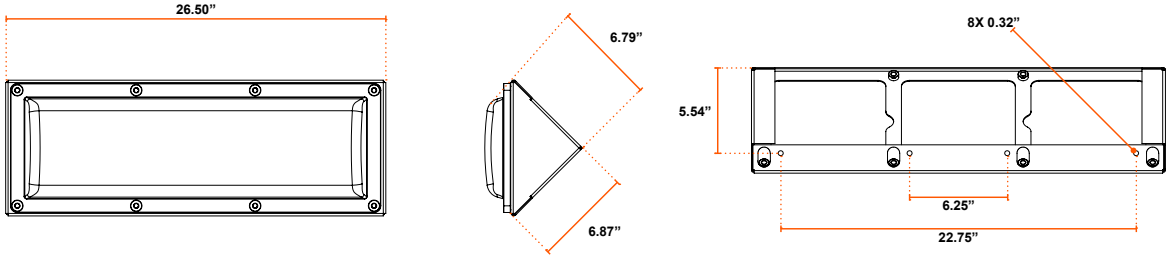

Linear Pro w/ JBox

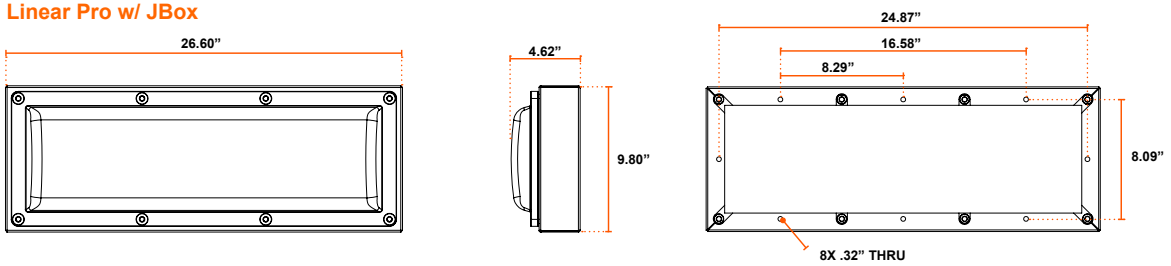

Linear Pro w/ JT Box

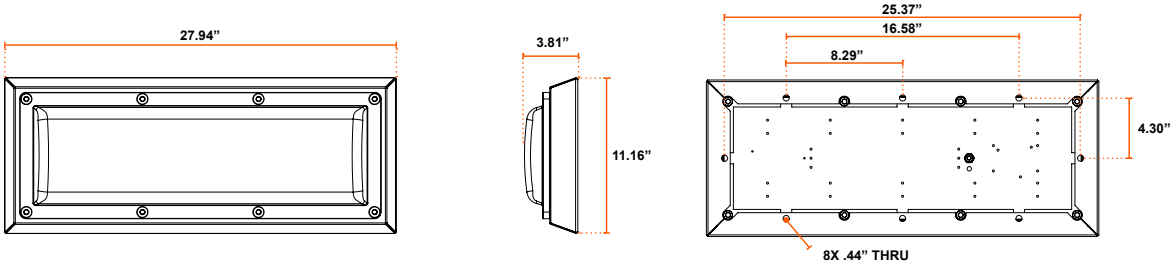

Dimensional Data (Continued)

Linear Pro w/ J1 & J2 Box

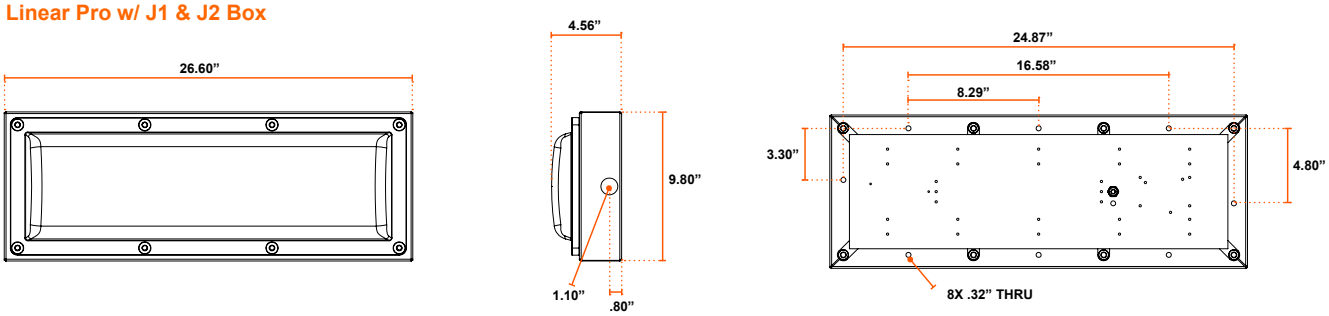

Linear Pro w/ P1 Plate

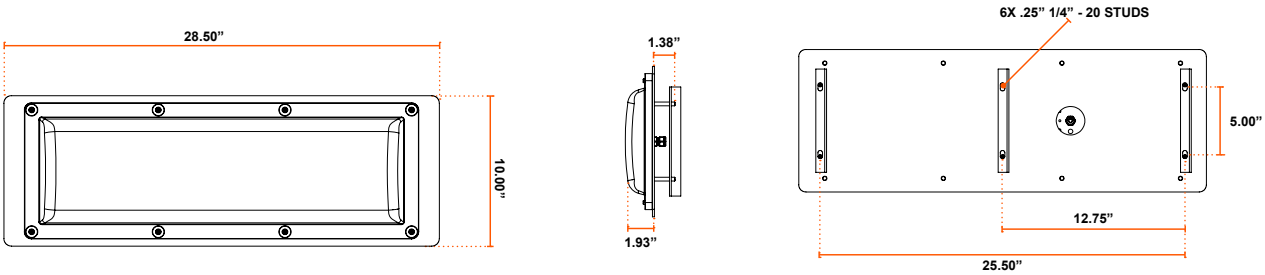

Linear Pro w/ P5 Plate

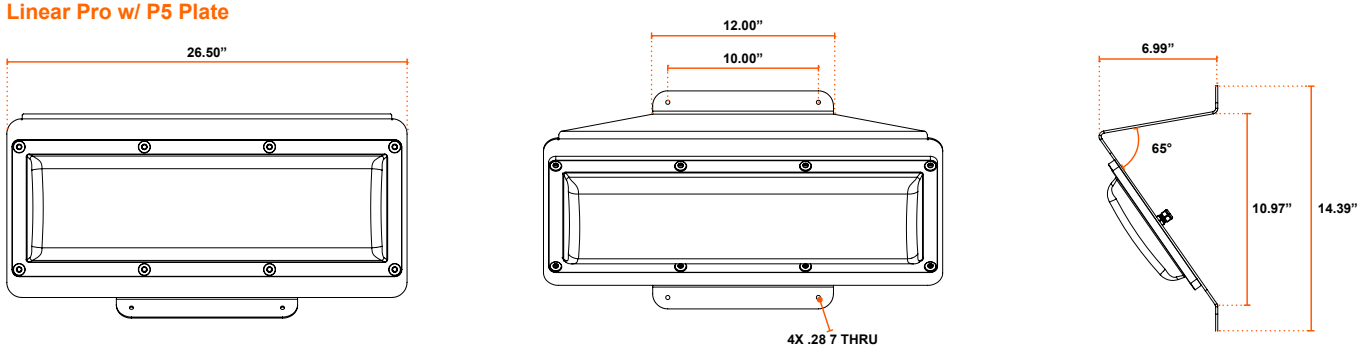

Linear Pro w/ D1 Plate

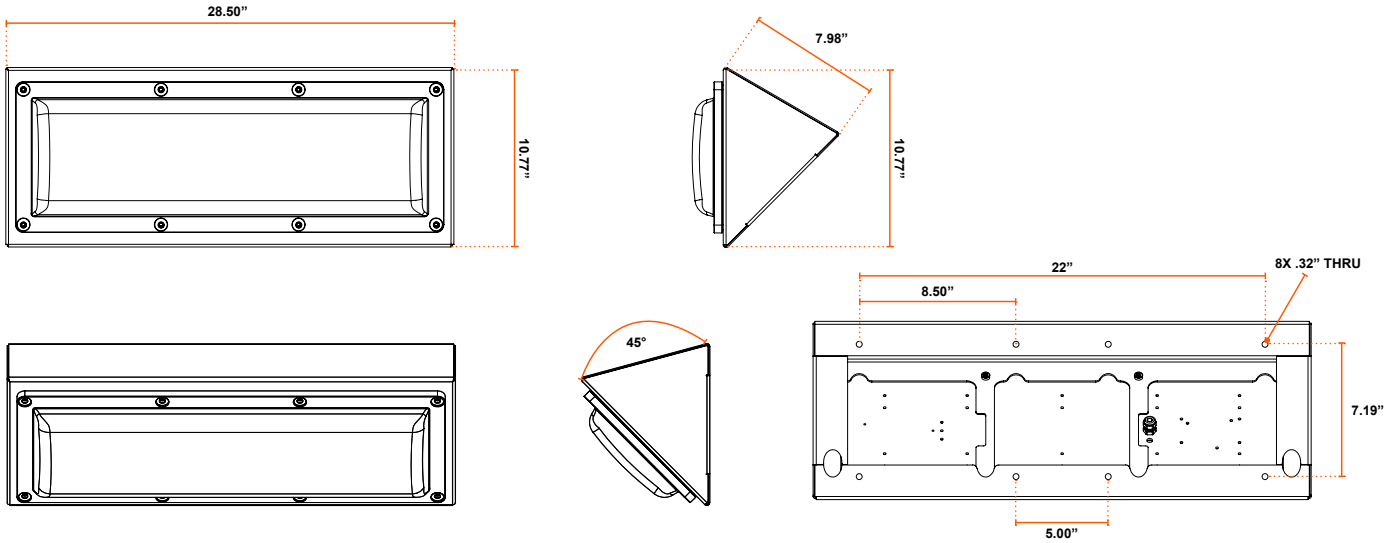

Photometric Data

Photometric Data

Watt	Lens Material	CCT	Lumens	Additional Info	IES File
34W	UR	4000K	3634	34W Linear Pro - 4000K CCT	LR-34W-4000K-N-UR
34W	UR	5000K	3838	34W Linear Pro - 5000K CCT	LR-34W-5000K-N-UR
40W	UR	4000K	4455	40W Linear Pro - 4000K CCT	LR-40W-4000K-N-UR
40W	UR	5000K	4417	40W Linear Pro - 5000K CCT	LR-40W-5000K-N-UR
80W	UR	4000K	8575	80W Linear Pro - 4000K CCT	LR-80W-4000K-N-UR
80W	UR	5000K	8542	80W Linear Pro - 5000K CCT	LR-80W-5000K-N-UR

Photometric Data - Count/Night Light - UR Lens

Watt.	Lense Material	CCT	Lumens	Additional Info.	IES File
10W	UR	2700K	838	Night Light Only	LR-10W-2700K-Y-UR
44W	UR	4000K	4440	34W Linear Pro - UR Lens - 4000K CCT W/ Night Light On	LR-24W-4000K-Y-UR
44W	UR	5000K	4626	34W Linear Pro - UR Lens - 5000K CCT W/ Night Light On	LR-24W-5000K-Y-UR
50W	UR	4000K	5252	40W Linear Pro - UR Lens - 4000K CCT W/ Night Light On	LR-24W-4000K-Y-UR
50W	UR	5000K	5218	40W Linear Pro - UR Lens - 5000K CCT W/ Night Light On	LR-32W-5000K-Y-UR
90W	UR	4000K	9961	80W Linear Pro - UR Lens - 4000K CCT W/ Night Light On	LR-32W-4000K-Y-UR
90W	UR	5000K	10014	80W Linear Pro - UR Lens - 5000K CCT W/ Night Light On	LR-32W-5000K-Y-UR

Shipping Dimensions

Product	Length	Width	Height	Weight
40W Linear Pro	28.1875”	12.125”	4.875”	15 lbs
40W Corner Linear	27.625”	7.5”	7.5”	20 lbs
80W Linear Pro	28.1875”	12.125”	4.875”	16 lbs
80W Corner Linear	27.625”	7.5”	7.5”	21 lbs
40W Linear Pro With P1 Plate	28.1875”	12.125”	4.875”	26 lbs
80W Linear Pro With P1 Plate	28.1875”	12.125”	4.875”	26 lbs
40W Linear Pro With D1 Box	28”	28”	10”	28 lbs
80W Linear Pro With D1 Box	28”	28”	10”	28 lbs
Items Shipped Seperately	**Length**	**Width**	**Height**	**Weight**
P5 Plate	28.1875”	12.125”	4.875”	8 lbs
Linear Pro Jbox	28.1875”	12.125”	4.875”	9 lbs
Linear Pro JT Box	28.1875”	12.125"	4.875”	9 lbs
Linear Pro J1 Box	28.1875"	12.125”	4.875”	9 lbs
Linear Pro J2 Box	28.1875”	12.125”	4.875”	9 lbs
Corrugated Plate	28.1875”	12.125”	4.875”	9 lbs