shat·r·shield

Project			
Date		Type	

IRONCLAD® GDL
GENERAL DUTY LINEAR

The Ironclad® General Duty Linear light or G.D.L is designed primarily for larger areas in correctional and behavioral applications. The fixture's extreme low profile and compact housing is made to withstand abuse and features a rimless edge providing a rugged lighting solution.

Manufactured in America with globally and domestically sourced components

Ordering Chart Information

Example: 080-GDL-50-CM-Y-VH-PC-JB-SA-00-02

GDL-CM-VH-PC-02

Wattage		Fixture	CCT		Mount	Count/Night Light		Voltage	Lens
		GDL			CM			VH	PC
040	40W	GDL General Duty Linear	40	4000K	CM Center	Y	Yes	VH 120 to 277 V	PC Polycarbonate
080	80W		50	5000K		N	No		

Accessory 1		Accessory 2		Accessory 3		Rev
						02
00	None	00	None	00	None	02
CB	14ga Corner Box Kit	CF	Cinder Block Fasteners	B1	TBD Battery[1]	
JB	14ga Surface Box Kit	SA	Spike Anchors			
PM	Pendant Mount	TB	Tamperproof Bolts/Inserts			
SW	Sample Whip	MD	Hammer Drive			
S2	Sample Whip + Sample Hardware	MS	Metal Ceiling Screws			
1W	1 Foot Whip					
2W	2 Foot Whip					
DL	Ligature Resistant Downlight Box					
D1	Flattop Downlight Box					
PA	Corrugated Plate					
6W	6 Foot Whip					
2F	Longer Fixture Wires					

Notes:
1. MIP 100 battery backup will ship separately, not attached to unit

For accessories not shown or custom plates, please contact customer service at (800) 223-0853.

Specifications

Lumens: 4400 - 9100. lm, Count/Night Light 740 lm
Watts: 40W, 80W
Voltage: 120-277 VAC
Main Light CRI: 80
Night Light CRI: 90
LED Life: L70>75,000 Hours; Projected>100,000 Hours
Lens: Highly impact-resistant 1/4" thick polycarbonate with a minimum IK10 impact rating
Installation: Anchored flush onto ceiling with (10) spike anchors or optional recessed tamper-proof 1/4" stainless steel bolts or cinder block fasteners or optional pendant mount
Foot Candles: 35 ftc at the desk level; 22 ftc at MH of 8ft
Dimensions: 24.25" long x 11.6" wide x 2.2" tall

Specifications Continued

Color Temperatures:5000K, 4000K and Count/Night Light 2700K

Features: Extreme Durability - hammer & knife tested. No areas to hide or conceal contraband

Warranty: 5-year limited warranty. Complete warranty terms located **here**

Photometric Data

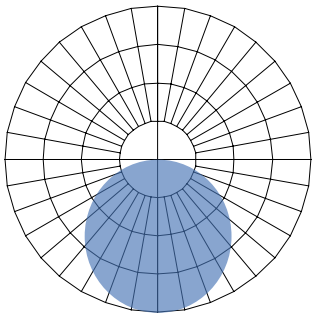

Indoor Report

- Maximum Candela = 2964.66
- Luminaire Lumens = 9131

Dimensional Data

GDL

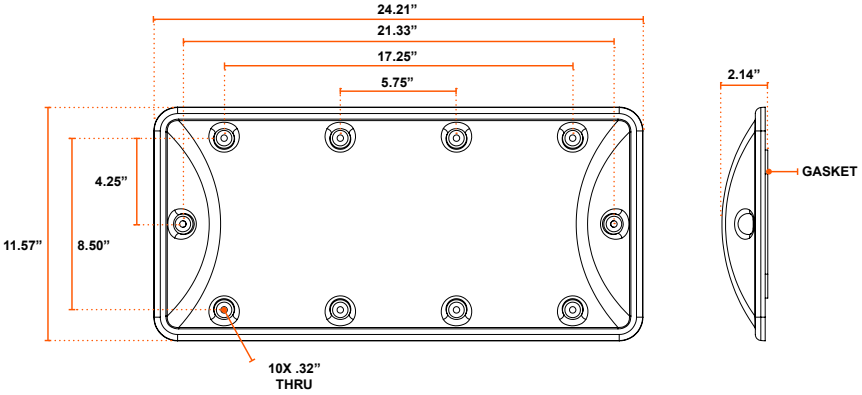

GDL w/ JBox

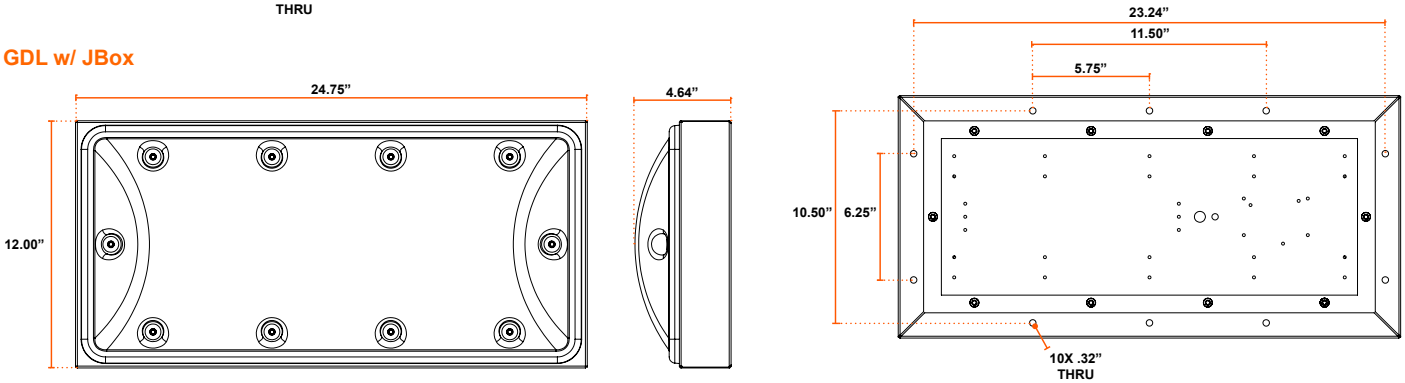

GDL w/ Pendant Mount

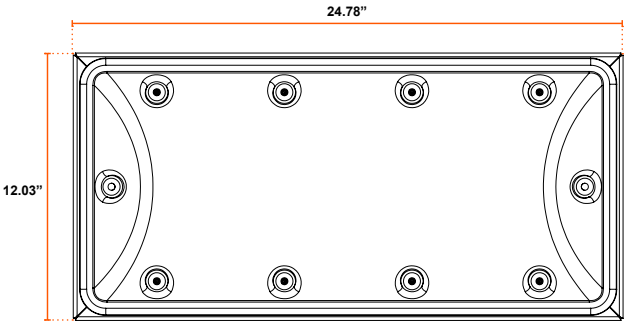

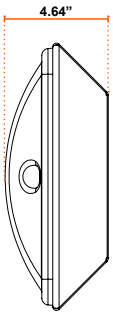

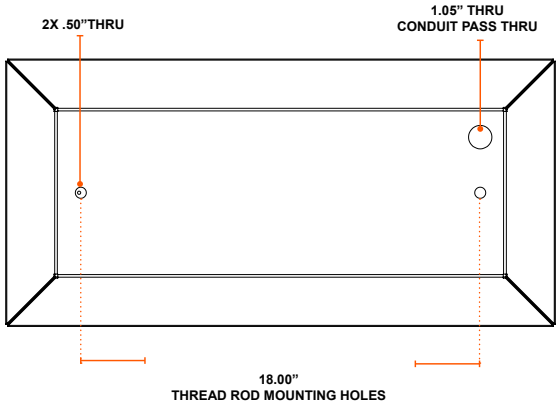

GDL w/ Corner Box

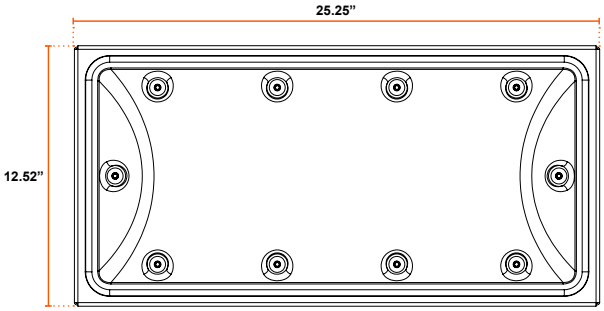

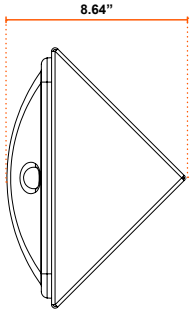

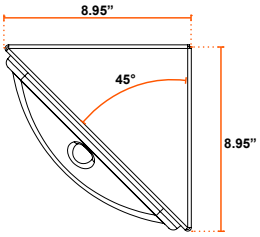

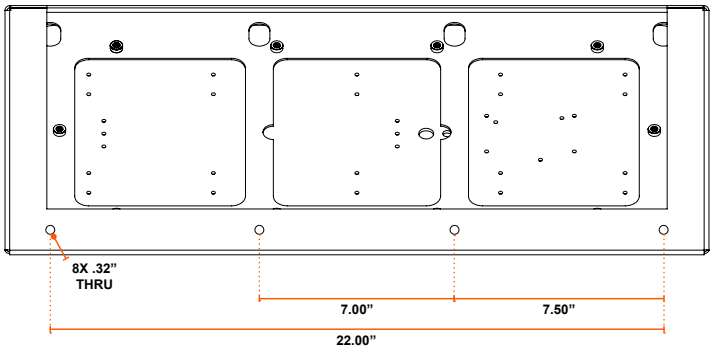

GDL w/ D1 Box

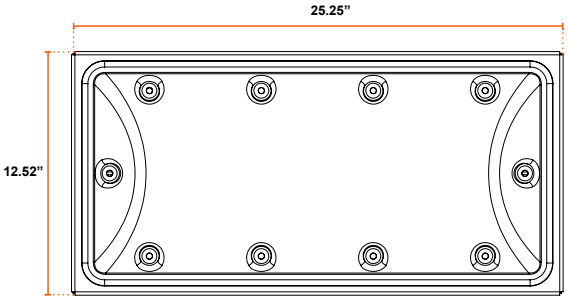

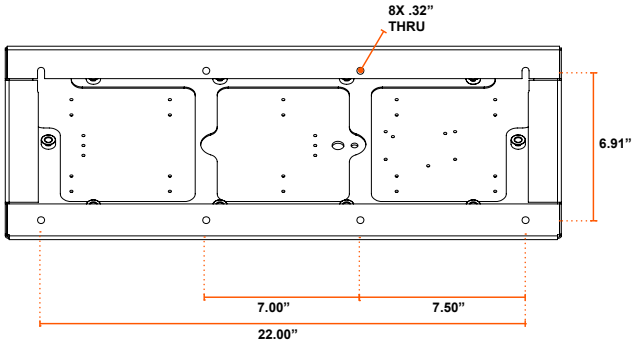

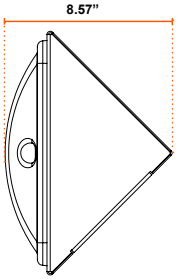

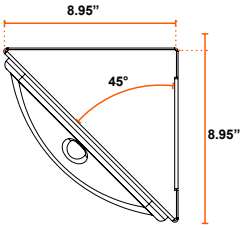

GDL w/ PA Corrugated Plate

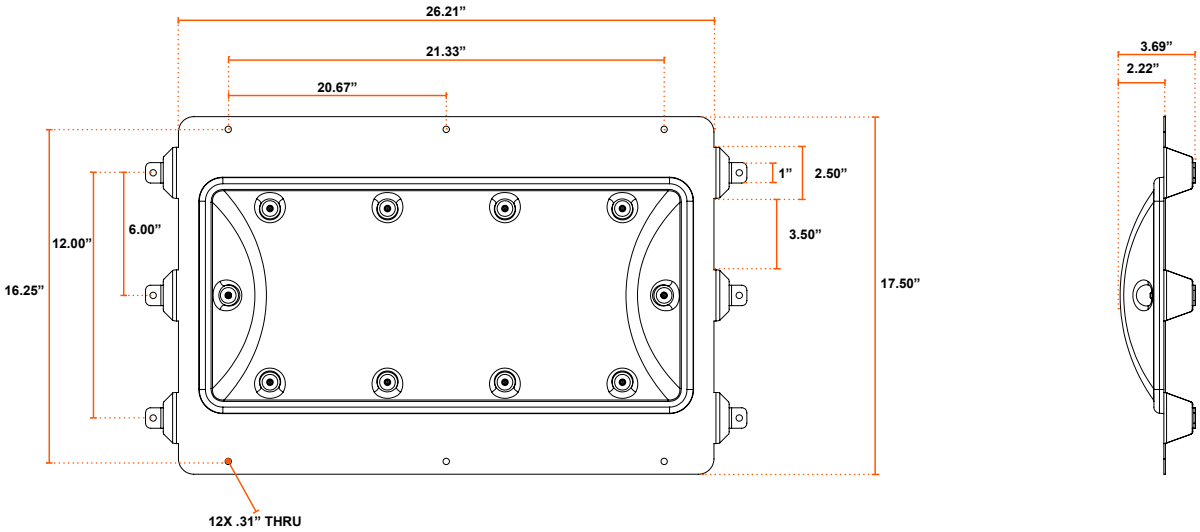

GDL w/ DL Box

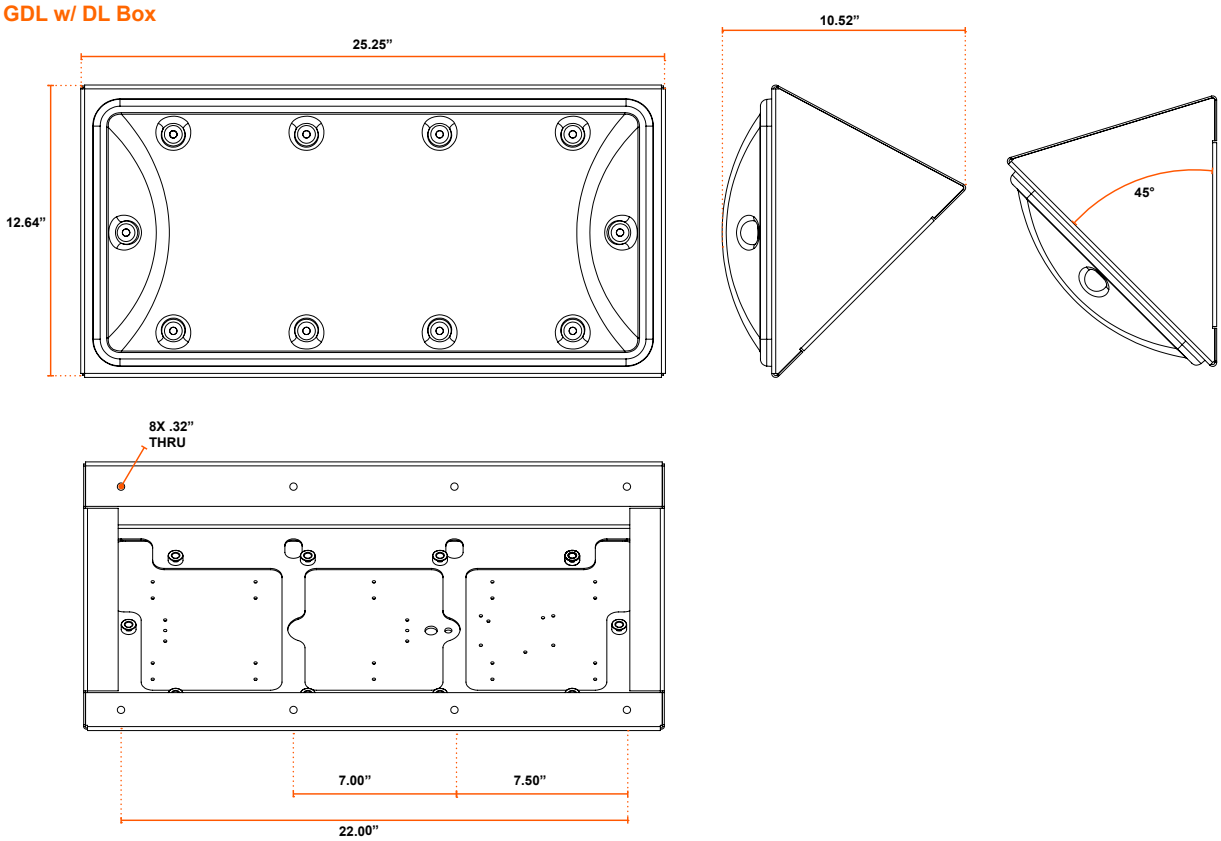

Photometric Data

Photometric Data

Watt	Lens Material	CCT	Lumens	Description	IES File
10W	PC	2700K	736	10W GDL - 2700K CCT - Night Light Only	GDL-10W-2700K-PC
40W	PC	4000K	4359	40W GDL - 4000K CCT	GDL-40W-4000K-PC
40W	PC	5000K	4566	40W GDL - 5000K CCT	GDL-40W-5000K-PC
80W	PC	4000K	8697	80W GDL - 4000K CCT	GDL-80W-4000K-PC
80W	PC	5000K	9131	80W GDL - 5000K CCT	GDL-80W-5000K-PC

Additional Photometric Data w/ Nightlight

Watt	Lens Material	CCT	Lumens	Description	IES File
50W	PC	5000K	5291	40W GDL - 5000K CCT W/ Night Light On	GDL-50W-5000K-Y-PC
90W	PC	5000K	9800	90W GDL - 5000K CCT W/ Night Light On	GDL-90W-5000K-Y-PC

Shipping Dimensions

Product	Length	Width	Height	Weight
40W GDL	28”	15”	5”	9 lbs
80W GDL	28”	15”	5”	10 lbs
Items Shipped Separately	**Length**	**Width**	**Height**	**Weight**
GDL Jbox	28”	15”	5”	10 lbs
GDL Corner Box	30”	9”	9”	10 lbs
GDL DL Downlight Box	30”	9”	9”	17 lbs
GDL D1 Box - Flattop DL Box	30”	9”	9”	15 lbs
GDL PM Pendant Mount Box	26”	15”	5”	14 lbs
GDL PA Corrugated Plate	30”	20”	4”	11 lbs