shat·r·shield

Project			
Date		Type	

IRONCLAD® H2O PRO™

The Ironclad® H2O Pro Shower Fixture is specifically designed for installation in correctional facility shower areas. This fixture is IP66 rated for water resistance against high pressure water jets. Also built to be highly impact-resistant with its 1/4" thick polycarbonate lens and virtually impenetrable 304 stainless steel outer ring and tamper-proof bolts. Facilities will benefit from its safety and rugged nature even in high security area shower units.

Manufactured in America with globally and domestically sourced components

Ordering Chart Information

Example: 10-H2O-27-CL-FR-VH-SS-PC-00-JB-00-01

H2O-50-FR-VH-00

Wattage		Fixture	CCT		Mount		Lens Coating	Voltage	Ring Material		Lens Type	
		H2O	50				FR	VH				
10[1]	10W	H2O Wet Location	27	2700K	CL	Ceiling	FR Frosted	VH 120-277V	SS	304 Stainless Steel	PC	Polycarbonate
24[2]	24W		30	3000K	FT	Flat Top			P1	Powder Coat, SS, Black	UR	Urethane
35[3]	35W		35	3500K	FW	Flat Wall			P2	Powder Coat, SS, White		
			40	4000K	WL	Wall			P3	Powder Coat, SS, Brown		
			50	5000K								

Accessory 1		Accessory 2		Accessory 3	Rev
				00	
00	None	00	None	00 None	01 03
CF	Cinder Block Fasteners	CB	14ga Corner Box Kit		
MS	Metal Ceiling Screws	DL	Ligature Resistant Downlight Surface Box		
SA	Spike Anchors	DS	Downlight Surface Box with Switch		
TB	Tamperproof Bolts/Inserts	JB	14ga Surface Box Kit		
		PD	Yakima (Attached Plate)		
		SW	Sample Whip		
		S2	Sample Whip + Sample Hardware		
		WB	Weather Resistant Box		
		1W	1 Foot Whip		
		2W	2 Foot Whip		

Notes:
1. 10W is Only Compatible With 2700K & 3500K CCT
2. 24W is Only Compatible With 2700K, 3500K, 4000K, 5000K CCT
3. 35W is Only Compatible With 2700K, 3000K, 4000K, 5000K CCT

For accessories not shown or custom plates, please contact customer service at (800) 223-0853.

Specifications

Lumens: 800, 1800, 2600 lm
Watts: 10W, 24W, 35W
Voltage: 120-277 VAC
Main Light CRI: 70
Night Light CRI: 70
LED Life: L70>75,000 Hours; Projected>100,000 Hours
Lens: Highly impact-resistant 0.238” thick polycarbonate or polyurethane with an IK10 impact rating
Installation: Anchored flush onto ceiling with (6) recessed tamper-proof bolts or (6) spike anchors
Wiring: Hard wired direct to AC current; eliminating failure points via driver
One piece Mounting Ring: 0.5” thick 304 Stainless Steel
Mounting: Aluminum heat sink to maintain thermal management
Dimensions: 9.25” diameter x 2.0” tall
Color Temperatures: 5000K, 4000K, 3500K or 2700K
Features: No accessible parts or hinges, No rusting or peeling paint, Extreme Durability - hammer & knife tested, No areas to hide or conceal contraband
Warranty: 5-year limited warranty. Complete warranty terms located **here.**

Photometric Data

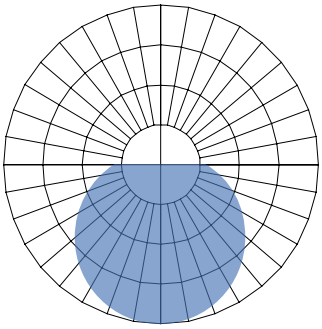

Indoor Report

- Maximum Candela = 746.1
- Luminaire Lumens = 2715

Dimensional Data

H2O - Standard & Flat Top Ring (FT)

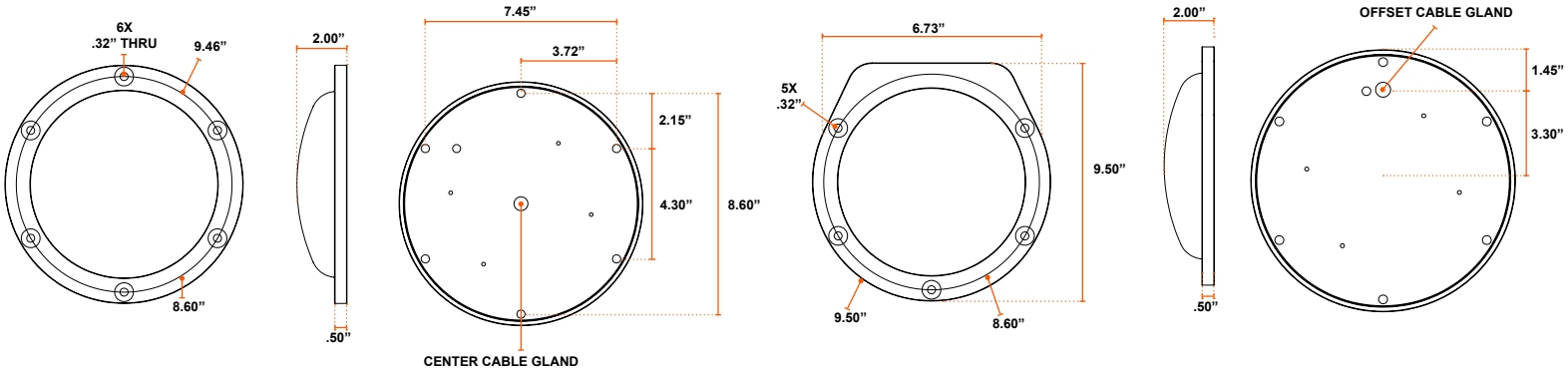

H2O - JB Surface Box & CB Corner Box

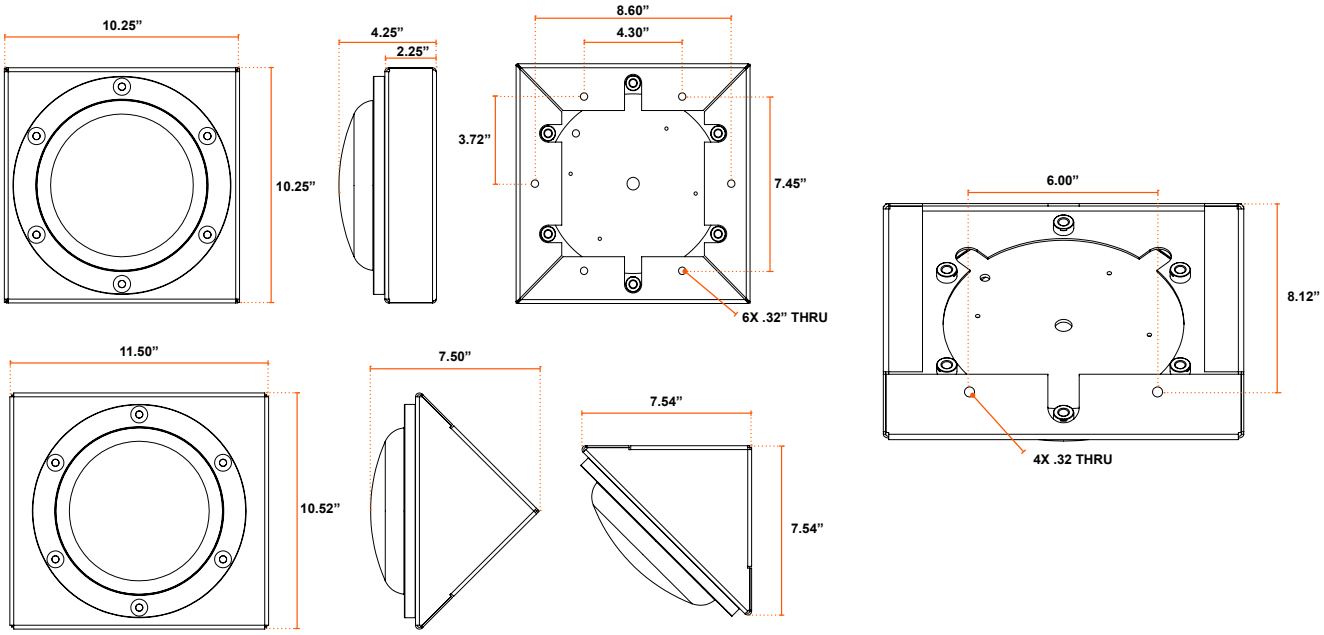

H2O - DL Downlight Box

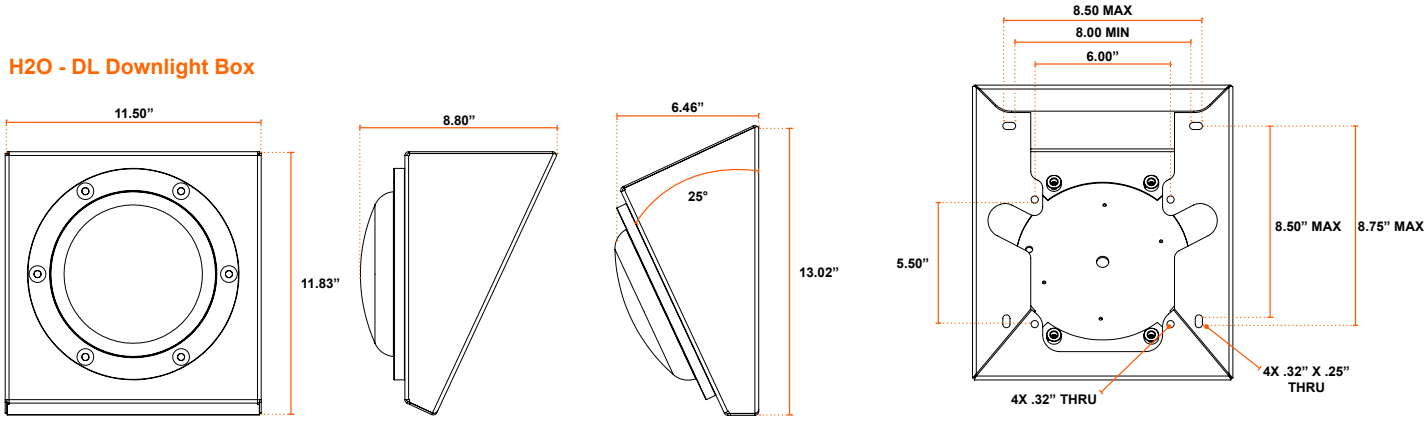

H2O - DS Downlight Box With Switch

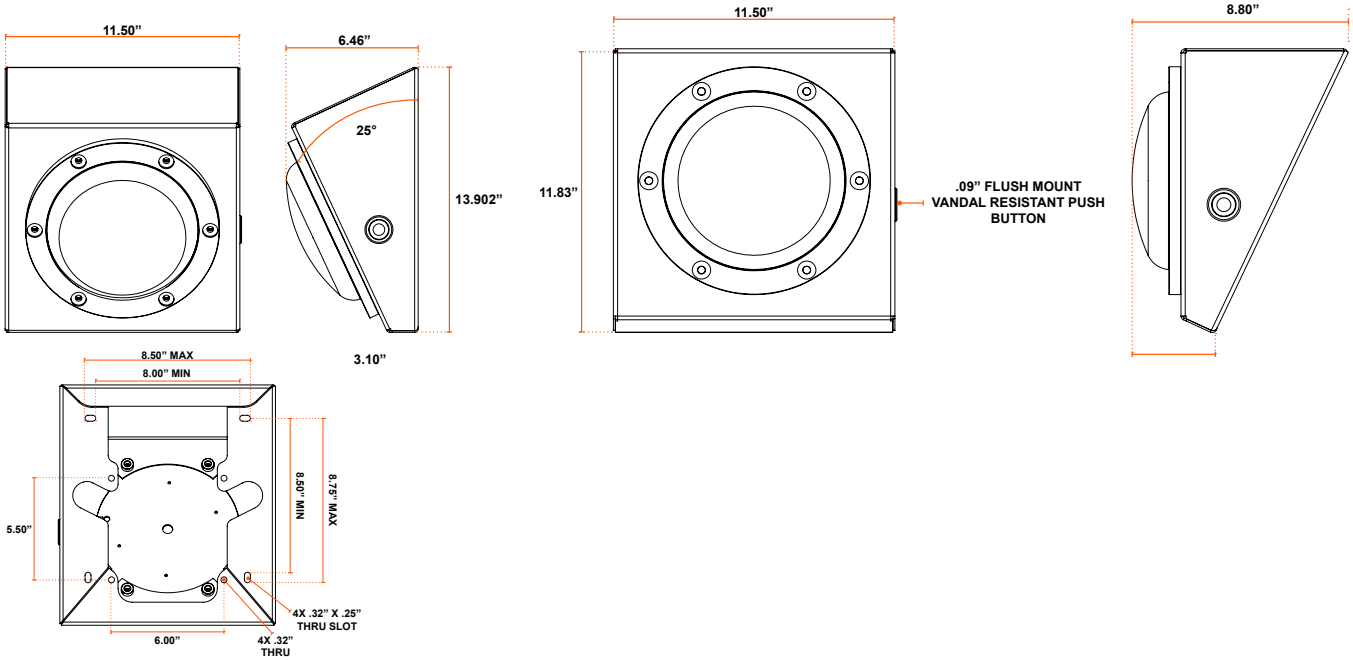

H2O - PD Plate

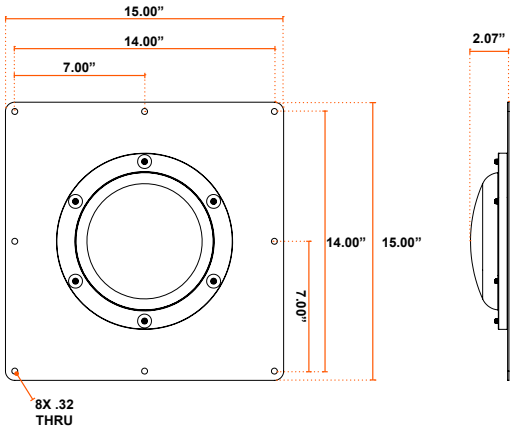

H2O - WB Weather Resistant Box

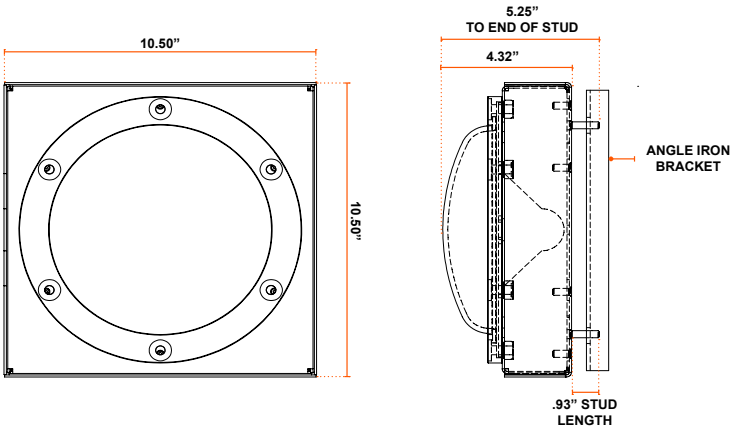

Photometric Data

Photometric Data 120VAC - UR LENS

Watt	CCT	Lumens	Description	IES File
10W	2700K	790	H2O 10W 2700K CCT UR LENS ON 120VAC	H2O-10W-2700K-UR-120VAC.ies
10W	3500K	872	H2O 10W 3500K CCT UR LENS ON 120VAC	H2O-10W-3500K-UR-120VAC.ies
24W	2700K	1546	H2O 24W 2700K CCT UR LENS ON 120VAC	H2O-24W-2700K-UR-120VAC.ies
24W	3500K	1629	H2O 24W 3500K CCT UR LENS ON 120VAC	H2O-24W-3500K-UR-120VAC.ies
24W	4000K	1670	H2O 24W 4000K CCT UR LENS ON 120VAC	H2O-24W-4000K-UR-120VAC.ies
24W	5000K	1727	H2O 24W 5000K CCT UR LENS ON 120VAC	H2O-24W-5000K-UR-120VAC.ies
35W	2700K	2250	H2O 35W 2700K CCT UR LENS ON 120VAC	H2O-35W-2700K-UR-120VAC.ies
35W	3500K	2460	H2O 35W 3500K CCT UR LENS ON 120VAC	H2O-35W-3500K-UR-120VAC.ies
35W	4000K	2553	H2O 35W 4000K CCT UR LENS ON 120VAC	H2O-35W-4000K-UR-120VAC.ies
35W	5000K	2264	H2O 35W 5000K CCT UR LENS ON 120VAC	H2O-35W-5000K-UR-120VAC.ies

Photometric Data 277VAC - UR LENS

Watt	CCT	Lumens	Description	IES File
10W	2700K	841	H2O 10W 2700K CCT UR LENS ON 277VAC	H2O-10W-2700K-UR-277VAC.ies
10W	3500K	835	H2O 10W 3500K CCT UR LENS ON 277VAC	H2O-10W-3500K-UR-277VAC.ies
24W	2700K	1706	H2O 24W 2700K CCT UR LENS ON 277VAC	H2O-24W-2700K-UR-277VAC.ies
24W	3500K	1657	H2O 24W 3500K CCT UR LENS ON 277VAC	H2O-24W-3500K-UR-277VAC.ies
24W	4000K	1728	H2O 24W 4000K CCT UR LENS ON 277VAC	H2O-24W-4000K-UR-277VAC.ies
24W	5000K	1832	H2O 24W 5000K CCT UR LENS ON 277VAC	H2O-24W-5000K-UR-277VAC.ies
35W	2700K	2531	H2O 35W 2700K CCT UR LENS ON 277VAC	H2O-35W-2700K-UR-277VAC.ies
35W	3500K	2465	H2O 35W 3500K CCT UR LENS ON 277VAC	H2O-35W-3500K-UR-277VAC.ies
35W	4000K	2715	H2O 35W 4000K CCT UR LENS ON 277VAC	H2O-35W-4000K-UR-277VAC.ies
35W	5000K	2678	H2O 35W 5000K CCT UR LENS ON 277VAC	H2O-35W-5000K-UR-277VAC.ies

Photometric Data 120VAC - PC LENS

Watt	CCT	Lumens	Description	IES File
10W	2700K	722	H2O 10W 2700K CCT PC LENS ON 120VAC	H2O-10W-2700K-PC-120VAC.ies
10W	3500K	792	H2O 10W 3500K CCT PC LENS ON 120VAC	H2O-10W-3500K-PC-120VAC.ies
24W	2700K	1416	H2O 24W 2700K CCT PC LENS ON 120VAC	H2O-24W-2700K-PC-120VAC.ies
24W	3500K	1482	H2O 24W 3500K CCT PC LENS ON 120VAC	H2O-24W-3500K-PC-120VAC.ies
24W	4000K	1529	H2O 24W 4000K CCT PC LENS ON 120VAC	H2O-24W-4000K-PC-120VAC.ies
24W	5000K	1575	H2O 24W 5000K CCT PC LENS ON 120VAC	H2O-24W-5000K-PC-120VAC.ies
35W	2700K	2048	H2O 35W 2700K CCT PC LENS ON 120VAC	H2O-35W-2700K-PC-120VAC.ies
35W	3500K	2246	H2O 35W 3500K CCT PC LENS ON 120VAC	H2O-35W-3500K-PC-120VAC.ies
35W	4000K	2319	H2O 35W 4000K CCT PC LENS ON 120VAC	H2O-35W-4000K-PC-120VAC.ies
35W	5000K	2091	H2O 35W 5000K CCT PC LENS ON 120VAC	H2O-35W-5000K-PC-120VAC.ies

Photometric Data 277VAC - PC Lens

Watt.	CCT	Lumens	Description	IES File
10W	2700K	768	H2O 10W 2700K CCT PC LENS ON 277VAC	H2O-10W-2700K-PC-277VAC.ies
10W	3500K	760	H2O 10W 3500K CCT PC LENS ON 277VAC	H2O-10W-3500K-PC-120VAC.ies
24W	2700K	1561	H2O 24W 2700K CCT PC LENS ON 277VAC	H2O-24W-2700K-PC-120VAC.ies
24W	3500K	1501	H2O 24W 3500K CCT PC LENS ON 277VAC	H2O-24W-3500K-PC-120VAC.ies
24W	4000K	1560	H2O 24W 4000K CCT PC LENS ON 277VAC	H2O-24W-4000K-PC-120VAC.ies
24W	5000K	1664	H2O 24W 5000K CCT PC LENS ON 277VAC	H2O-24W-5000K-PC-120VAC.ies
35W	2700K	2319	H2O 35W 2700K CCT PC LENS ON 277VAC	H2O-35W-2700K-PC-120VAC.ies
35W	3500K	2239	H2O 35W 3500K CCT PC LENS ON 277VAC	H2O-35W-3500K-PC-120VAC.ies
35W	4000K	2484	H2O 35W 4000K CCT PC LENS ON 277VAC	H2O-35W-4000K-PC-120VAC.ies
35W	5000K	2464	H2O 35W 5000K CCT PC LENS ON 277VAC	H2O-35W-5000K-PC-120VAC.ies

Shipping Dimensions

Product	Length	Width	Height	Weight
H2O Pro	11.25”	11.25”	4.75”	6 lbs
H2O Pro W/ PD Plate	16”	16”	3”	12 lbs
Items Shipped Seperately	**Length**	**Width**	**Height**	**Weight**
JB Surface Box Kit	11.25”	11.12”	4.75”	6 lbs
CB Corner Box Kit	12”	8”	8”	6 lbs
DL Downlight Surface Box	12”	12"	7”	9 lbs
DS Downlight Surface Box - Switch	12”	12”	7”	10 lbs