Project Name:	Part Number:	Type:

VPAN SELECT
BACK LIT FLAT PANEL

PRODUCT OVERVIEW

SCAN OR CLICK HERE

FEATURES

- Back-lit panel with a high-transmission low glare PMMA frosted lens for uniform and visually comfortable lighting.
- Robust die-formed housing with a white post-paint finish, Type IC rating for insulation contact, and optional NSF certification per NSF/ANSI Standard 2.
- Available in 1x4, 2×2 and 2×4 sizes, with support for grid, flange, surface, suspended, skylight, and skylight tilt mounting options, designed to fit both 15/16" and 9/16" T-grid ceiling systems.
- Field-selectable or factory-set lumen output (2,600–8,000 lumens) and CCT (3500K, 4000K, 5000K) for adaptable lighting solutions.
- Features >80 CRI and LEDs binned to <3 SDCM for exceptional color uniformity and consistency.
- Offers high efficacy of up to 154 lm/W with 0–10V dimming (100%–10%), featuring reliable performance with calculated L70 > 100,000 hours for long-lasting efficiency.
- DLC® qualified and ETL listed for damp locations, backed by a 5-year standard warranty (10-year optional)

DIGITAL NAVIGATION

Explore the spec sheet through the links below

ORDERING GUIDE | QUICK SHIP | LED SYSTEMS TABLE | CONTROLS
LINE DRAWINGS | PHOTOMETRIC DATA

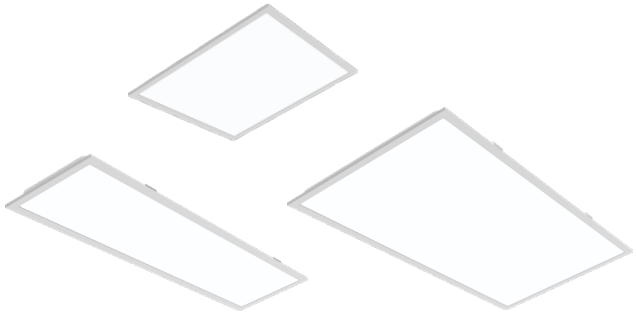

SUITABLE APPLICATIONS

- Education
- Retail
- Food Prep
- Healthcare
- Grocery Store
- Storage Facility
- Commercial Office
- Residential
- Commercial Kitchen

CERTIFICATIONS

NUROAir® Bluetooth Controls — POWERED BY ILLUMUS, BRANDS

LUMEN SELECTABLE

CCT SELECTABLE

VS VALUE SELECT

QUICK SHIP

TITLE 24

5 YEAR WARRANTY

Intertek

DLC LISTED

SPECIFICATIONS

CONSTRUCTION
Robust Die-Formed Housing and lens frame with Post-Paint Finish for rigidity and durability. Formed, welded and tightly constructed corners seal to housing to deter entrance of outside particles. Designed to achieve maximum performance and improved aesthetics.

INSTALLATION
Designed for a variety of mounting solutions including recessed grid, flange and surface mount. Can be installed into standard 15/16" & 9/16" T-grid ceiling. 9/16" installations will reveal portions of post painted fixture frame. Standard integral T-grid clips affixed to housing for secure fixture to grid ceiling. Access plate installed on top of driver housing for ease of hardwire power connections. Optional factory installed power flex conduit whip (MC) available to reduce installation time.

ELECTRICAL
Class 2 LED light engine for high efficacy and long life. Calculated L70 > 100,000hrs. Power Factor > 0.90. Standard 120-277 Vac 0-10V dimmable (10% - 100%). Optional 347V step down transformer. Optional Bi-level dimming driver (50%). Lumen Selectable fixtures allow for ease of field lumen adjustment with switch located on top side of driver. Lumen Selectable fixtures ship at the highest lumen output. CCT Selectable fixtures ship at 4000K.

OPTICS
High transmission extruded PMMA frosted acrylic lens with excellent shielding for durability and LED glare reduction. Individual micro optics present over each LED chip to provide smooth uniform illumination.

CONTROLS
Factory installed bi-level dimming microwave sensor to provide maximize energy savings when area is unoccupied. Sensor requires use of programming tool to set low end trim fixture output. Sensor installed behind lens. Advanced Control options also available and would be remotely mounted in the neighboring ceiling tile.

CERTIFICATIONS
ETL Listed to US and Canadian safety standards. Suitable for damp locations. Type IC Rated for Insulation Contact. Title 24 Compliant with sensor option; see local ordinance for qualification information. DLC (DesignLights Consortium) Standard Qualified. Please refer to the DLC Qualified Products List at www. Designlights.org/QPL to confirm specific product qualifications. Optional NSF-certified models are listed per NSF/ANSI Standard 2.

WARRANTY
5 Year Warranty Standard; 10 Year Warranty Optional (Terms and Conditions apply).

© 2025 Copyright Industrial Lighting Products. All Rights Reserved.

VPAN SELECT
BACK LIT FLAT PANEL

ORDERING GUIDE

*Footnotes on page 3

PART # _____ **Example:** VPAN24-55L-U-CCTS-NURO/RCM

SERIES

VPAN14	1x4 Backlit Flat Panel
VPAN22	2x2 Backlit Flat Panel
VPAN24	2x4 Backlit Flat Panel

LUMENS

22L/33L/44L - Selectable
- **22L** 2,200 lm
- **33L** 3,300 lm
- **44L** 4,400 lm

22L/33L/44L - Selectable
- **22L** 2,200 lm
- **33L** 3,300 lm
- **44L** 4,400 lm

33L/44L/55L - Selectable
- **33L** 3,300 lm
- **44L** 4,400 lm
- **55L** 5,500 lm

50L/65L/80L - Selectable
- **50L** 5,000 lm
- **65L** 6,500 lm
- **80L** 8,000 lm

DRIVER

U	120-277V

CCT

CCTS	**35/40/50 - CCT Selectable**
35	3500K
40	4000K
50	5000K

FINISH

BLANK	White
BLK	Black

CERTIFICATIONS

BLANK	None
NSF[6]	NSF Certified

ALT DRIVER

BLANK	Standard Driver
SR [12]	Sensor-Ready Driver
DR [12]	DALI Driver
BLD [12,13,14]	Bi-Level Dimming Driver
LVD120 [12,13,14]	120V Line Voltage Leading Edge Forward Phase Driver
DIM1 [12]	1% Dimming Driver

EMERGENCY

BLANK	None
EM8 [1, 13, 19]	8W LED Battery Backup
EM10 [13, 19]	10W LED Battery Backup
EM10/HE [1, 13, 19]	10W LED Battery Backup
EM10/HE/SD [1, 13, 19]	10W LED Self-Diagnosing Battery Backup
EM12 [13, 19]	12W LED Battery Backup

CONTROLS OPTIONS

BASIC

BLANK	None
MWS [3]	User Selectable Bi-Level Dimming Microwave Sensor

ADVANCED

BLANK	None
NURO/RCM [20]	NUROAir Ready for use with NUROAir Ceiling Mount Bluetooth Groupable Sensor
ESMC/CM[7, 8, 9, 10, 11, 12]	EasySense Grouping Ceiling Mount Sensor
VDO [8, 10, 11, 12]	Lutron Vive DFCSJ-OEM-OCC Daylight & Occupancy Control
VRF [8, 12,17]	Lutron Vive DFCSJ-OEM-RF Radio Frequency Communication Only
AWNR [8, 12, 17]	Lutron Athena Wireless Node
AWNS [8, 11, 12]	Lutron Athena Wireless Node with Sensor
FCSJ-010	Lutron Vive Wireless PowPak Control

STEP DOWN

BLANK	None
SD347 [2]	347V Step Down Transformer

METAL CONDUIT

BLANK	None
MCx/3W	Metal Conduit (x=ft), 3-wire
MCx/4W	Metal Conduit (x=ft), 4-wire
MCx/5W[18]	Metal Conduit (x=ft), 5-wire
MCx/6W[18]	Metal Conduit (x=ft), 6-wire

WARRANTY

BLANK	5 Year
10YR	10 Year

CONTINUE TO NEXT PAGE

 © 2025 Copyright Industrial Lighting Products. All Rights Reserved.

ORDERING GUIDE (Continued)

*Footnotes on page 3

ACCESSORIES	
BLANK	None
NURO7/CM [7, 20]	NUROAir Ceiling Mount Bluetooth Groupable Sensor
NURO-SW-3B-BA-BL-WP-V1	NUROAir Bluetooth 3-Key Wireless Battery Powered Wall Switch
NURO-SW-5B-BA-BL-WP-V1	NUROAir Bluetooth 5-Key Wireless Battery Powered Wall Switch
NURO-SW-7B-AC-BL-WP-V1	NUROAir Bluetooth 7-Key Line Voltage (AC 120-277V) Powered Wall Switch
ESMC/WWS/DR [11]	Wireless Wall Dual Rocker Switch To Control Each ES Group Of Fixtures
FLGKxx [11]	Flange Mount Kit (xx=size, 14=1x4)
FLGKxx BLK [11]	Flange Mount Kit - Black Finish (xx=size, 14=1x4)
+VPANxx SM [11]	Surface Mount Kit (xx=size, 14=1x4)
+VPANxx SM BLK [11]	Black Surface Mount Kit (xx=size, 14=1x4)
+SMSKxx [11]	Surface Mount Skirt Kit (xx=size, 22=2x2)
+SMSKxx BLK [11]	Surface Mount Skirt Kit - Black Finish (xx=size, 14=1x4)
+VPANxx SLMK [11]	Skylight Mount Kit - White Finish (xx=size, 14=1x4)
+VPANxx SLMK BLK [11]	Skylight Mount Kit - Black Finish (xx=size, 14=1x4)
+VPAN22 SLMK/T [11, 16]	Skylight Mount Kit Tilt - White Finish
+VPAN22 SLMK/T BLK [11, 16]	Skylight Mount Kit Tilt - Black Finish
+VPANxx SEK [11, 15, 18]	Suspended Enclosure Kit - Black Finish - 60" aircraft cable (xx=size, 22=2x2)
+VPANxx SEK BLK [11, 15, 18]	Black Suspended Enclosure Kit - 60" aircraft cable (xx=size, 22=2x2)
ACx/L [5, 11]	Aircraft Cable Loop Set for Suspension Mounting (x=ft)
MW/RC	Microwave sensor remote
LJB	Large Junction Box

FOOTNOTES

[1] CEC Title 20 Compliant
[2] Does not qualify for DLC
[3] Must be used with MW/RC option for commissioning
[4] One needed per project
[5] Two sets required per fixture for suspension mounting
[6] Must select this option if NSF-certification is required
[7] Easily Controlled via mobile phone with Bluetooth app
[8] Must be used with SR Sensor Ready Driver
[9] One Sensor can be wired to up to (4) fixtures with SR Sensor Ready Driver Option
[10] Sensor to be mounted in adjacent ceiling tile
[11] Not NSF Listed
[12] Not compatible with the Lumen selectable and CCT selectable functions
[13] Not Compatible with SD347
[14] Not Compatible with Sensor options
[15] Aircraft Cable Set Included
[16] Only available on 2x2 sizes
[17] Sensor Installed into Knockout of Driver Box Housing
[18] Not compatible with Advanced Sensor Options
[19] Min ambient of 32ºF
[20] Must be selected with dedicated Lumen Output

QUICK SHIP ITEMS

PRODUCT	DESCRIPTION	DLC LISTING
VPAN14-22L/33L/44L-U-CCTS	1x4 Back-Lit Flat Panel, 22L/33L/44L Lumen Selectable, 35K/40K/50K CCT Selectable	Standard
VPAN22-22L/33L/44L-U-CCTS	2x2 Back-Lit Flat Panel, 22L/33L/44L Lumen Selectable, 35K/40K/50K CCT Selectable	Standard
VPAN24-33L/44L/55L-U-CCTS	2x4 Back-Lit Flat Panel, 33L/44L/55L Lumen Selectable, 35K/40K/50K CCT Selectable	Standard
VPAN24-50L/65L/80L-U-CCTS	2x4 Back-Lit Flat Panel, 50L/65L/80L Lumen Selectable, 35K/40K/50K CCT Selectable	Standard

 © 2025 Copyright Industrial Lighting Products. All Rights Reserved.

VPAN SELECT

BACK LIT FLAT PANEL

LED SYSTEMS INFO

LED SYSTEMS INFORMATION[1]		3500K		4000K		5000K			
Model Numbers	Fixed Model Numbers	Lumens	Efficacy	Lumens	Efficacy	Lumens	Efficacy	Watts[2]	Replaces
VPAN14-22L/33L/44L-U-CCTS	VPAN14-22L-U-XX	2,790 lm	135 lm/W	3,074 lm	154 lm/W	2,821 lm	138 lm/W	20W	1T8
	VPAN14-33L-U-XX	3,849 lm	126 lm/W	4,354 lm	149 lm/W	3,929 lm	130 lm/W	30W	2T8
	VPAN14-44L-U-XX	4,742 lm	117 lm/W	5,503 lm	144 lm/W	4,900 lm	122 lm/W	40W	3T8
VPAN22-22L/33L/44L-U-CCTS	VPAN22-22L-U-XX	2,638 lm	130 lm/W	2,904 lm	148 lm/W	2,724 lm	134 lm/W	20W	1T8
	VPAN22-33L-U-XX	3,684 lm	121 lm/W	4,156 lm	142 lm/W	3,834 lm	125 lm/W	30W	2T8
	VPAN22-44L-U-XX	4,569 lm	116 lm/W	5,240 lm	138 lm/W	4,751 lm	120 lm/W	39W	3T8
VPAN24-33L/44L/55L-U-CCTS	VPAN24-33L-U-XX	3,578 lm	126 lm/W	3,992 lm	143 lm/W	3,800 lm	133 lm/W	28W	2T8
	VPAN24-44L-U-XX	4,590 lm	120 lm/W	5,191 lm	140 lm/W	4,885 lm	128 lm/W	38W	3T8
	VPAN24-55L-U-XX	5,577 lm	113 lm/W	6,466 lm	135 lm/W	5,996 lm	122 lm/W	49W	4T8
VPAN24-50L/65L/80L-U-CCTS	VPAN24-50L-U-XX	5,362 lm	141 lm/W	5,527 lm	147 lm/W	5,428 lm	142 lm/W	38W	4T8
	VPAN24-65L-U-XX	6,474 lm	137 lm/W	6,680 lm	144 lm/W	6,528 lm	138 lm/W	47W	5T8
	VPAN24-80L-U-XX	7,603 lm	132 lm/W	7,914 lm	142 lm/W	7,669 lm	134 lm/W	57W	6T8

[1] Values are nominal, see IES file for more detail [2] Electrical data at 25C (77F). Actual wattage may differ by +/- 10%
* Ambient Temperature range is -4°F - 104°F for all models

CONTROLS OPTIONS

ADVANCED

NUROAir by ILLUMUS

NURO7/CM

NUROAir Ceiling Mount Bluetooth Sensor is the optimal groupable controls lighting solution. With main features such as Occupancy/ Vacancy, Dual-tech PIR Motion Sensing + Ultrasonic technology and Daylight Harvesting - this flexibility makes the NUROAir Ceiling Mount Sensor ideal for tailoring lighting to specific space needs, optimizing both ambiance and efficiency. The NUROAir App, available for download on iOS and Google Play Store, offers a user-friendly interface for automatic or manual customization of your space. Through the app, users can configure sensor settings such as the Light Output, CCT, Hold Time, Standby Time/Level, High/Low End Trim, Background Light Level, Set Schedules, and Control Lighting Groups or Zones, all from a mobile or tablet device. Manual control is also available with a range of compatible wireless & wired wall switch options.

NUROAir® Bluetooth Controls

POWERED BY ILLUMUS. BRANDS

Click Here or Scan Code to Learn More About

NUROAir Bluetooth Controls

EASYSENSE

ESMC/CM

EasySense sensor combines occupancy sensing, daylight harvesting and institutional tuning in one compact solution. This is an ideal control for any Commercial application. Each device allows you to turn on/off occupancy and/or daylight harvesting functions as well as set the full light output, background light level, occupancy prolong time, occupancy grace fading time & occupancy time out/hold time. It can be easily controlled via the Philips MasterConnect Bluetooth App on a mobile phone.

ESMC/WWS/DR

Optional Wireless / Batteryless Dual Rocker Wall Switch. Up to 100ft range. Functions include: On/Off, dimming and setting of (2) scenes for full room control.

Specifications:

- Wireless
- Batteryless
- Dual Rocker
- ZigBee®
- 30–100ft Range

Functions:

1. On (Hold to brighten up)
2. Off (Hold to dim down)
3. Scene 1
4. Scene 2

 © 2025 Copyright Industrial Lighting Products. All Rights Reserved.

CONTROLS (Continued)

LUTRON

VDO
Vive DFCSJ-OEM-OCC integral fixture control sensor with daylight & occupancy. Vive provides intuitive programming allowing for maximum flexibility with wireless communication & sensing as desired. Provided with factory installed components only. Lutron system provided by others. Sensor must be used in conjunction with Pico Switch/Dimmer. Cannot be used in conjunction with mechanical on/off power switch. Contact factory for more information.

VRF
Vive DFCSJ-OEM-RF integral fixture control with Radio Frequency (RF) communication. Vive provides intuitive programming allowing for maximum flexibility with wireless communication as desired. Provided with factory installed components only. Lutron system provided by others. Sensor must be used in conjunction with Pico Switch/Dimmer. Cannot be used in conjunction with mechanical on/off power switch. Contact factory for more information.

AWNR
Athena wireless node is a radio frequency (RF) device that enables simple, digital control of individual light fixtures in an Athena control system. Enables individual wireless control of each fixture in an Athena control system. Accommodates zone and control changes without rewiring. All drivers on the link are controlled as a single zone. Provided with factory installed components only. Lutron Athena system provided by others.

AWNS
Athena wireless node with a sensor that enables simple, digital control of individual light fixtures in an Athena control system. Provides wireless control of the fixture and includes a passive infrared (PIR) sensor for occupancy and a daylight sensor. Enables individual wireless control of each fixture in an Athena control system. Accommodates zone and control changes without rewiring. All drivers on the link are controlled as a single zone. Provided with factory installed components only. Lutron Athena system provided by others.

LINE DRAWINGS

1x4 SLMK Skylight Mount Kit

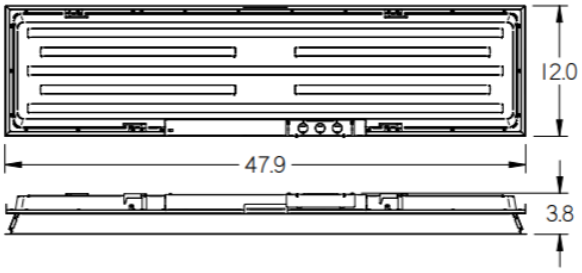

1x4 SEK Suspended Enclosure

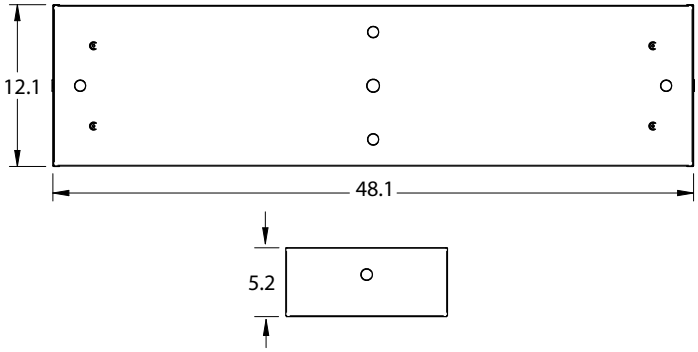

1x4 Flange Kit
Ceiling opening is 12.25" x 48.25"

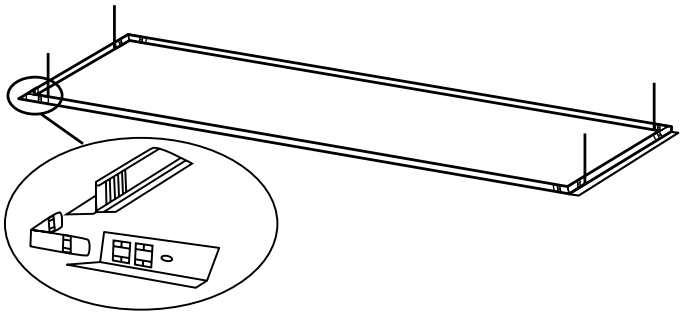

1x4 w/ EM

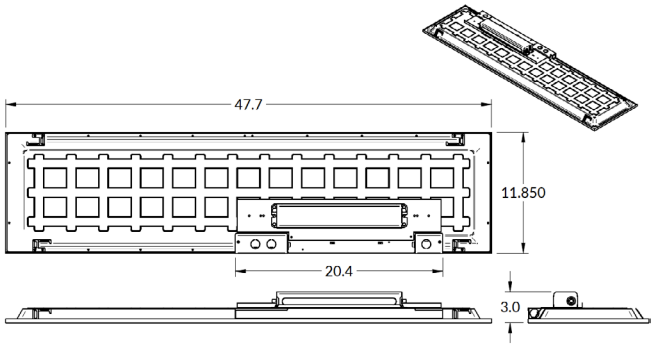

1x4 w/ SM Surface Mount Kit

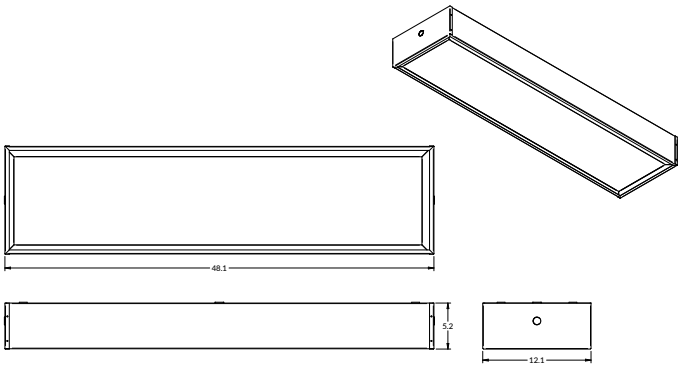

1x4 w/ SMSK Surface Mount Skirt Kit

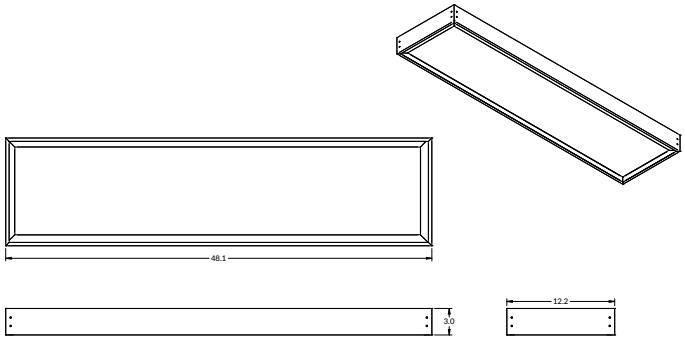

 © 2025 Copyright Industrial Lighting Products. All Rights Reserved.

LINE DRAWINGS (Continued)

2x2

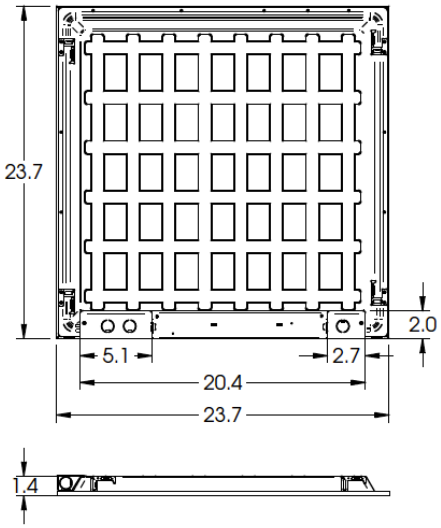

2x2 SEK Suspended Enclosure

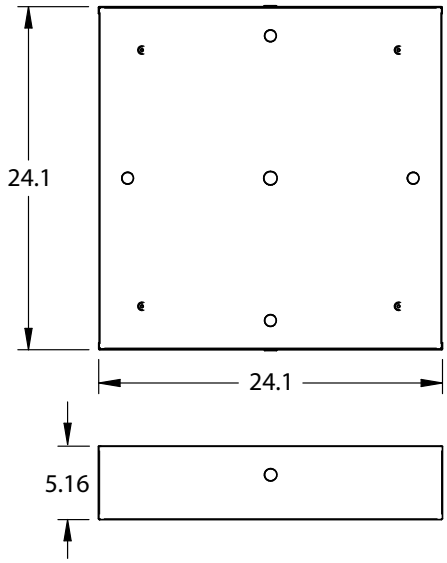

2x2 Flange Kit

Ceiling opening is 24.25" x 24.25"

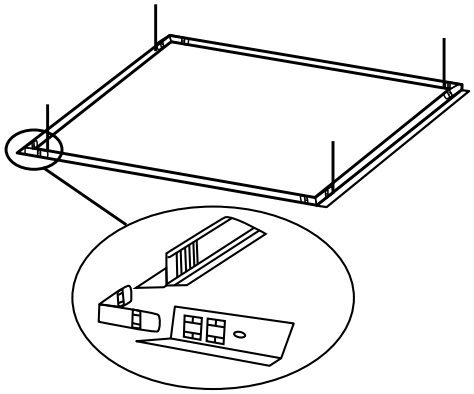

2x2 w/ EM

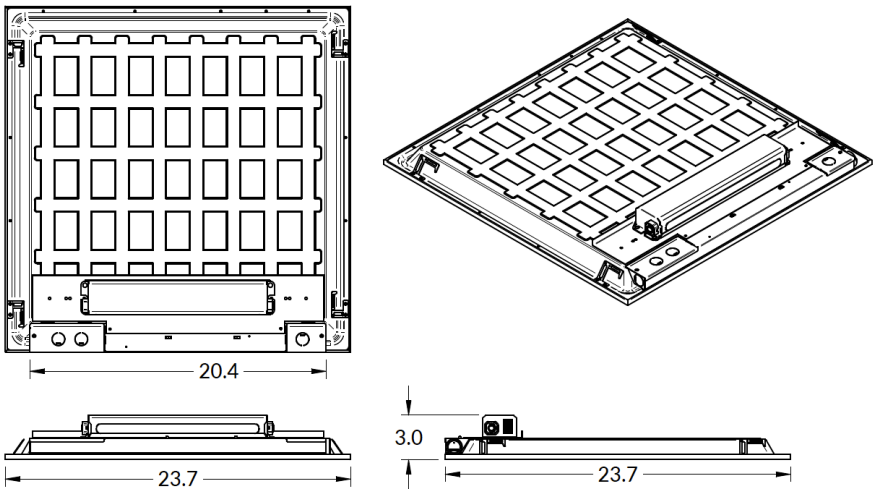

2x2 w/ SM Surface Mount Kit

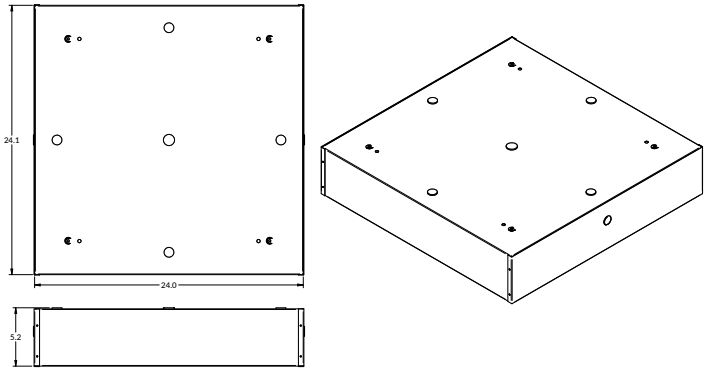

2x2 w/ SMSK Surface Mount Skirt Kit

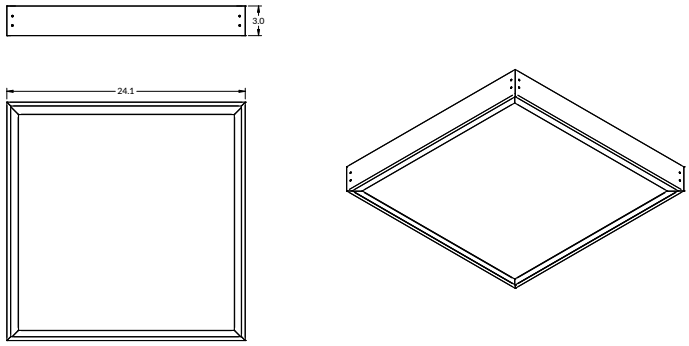

 © 2025 Copyright Industrial Lighting Products. All Rights Reserved.

LINE DRAWINGS (Continued)

2x2 Skylight Mount Tilt Kit

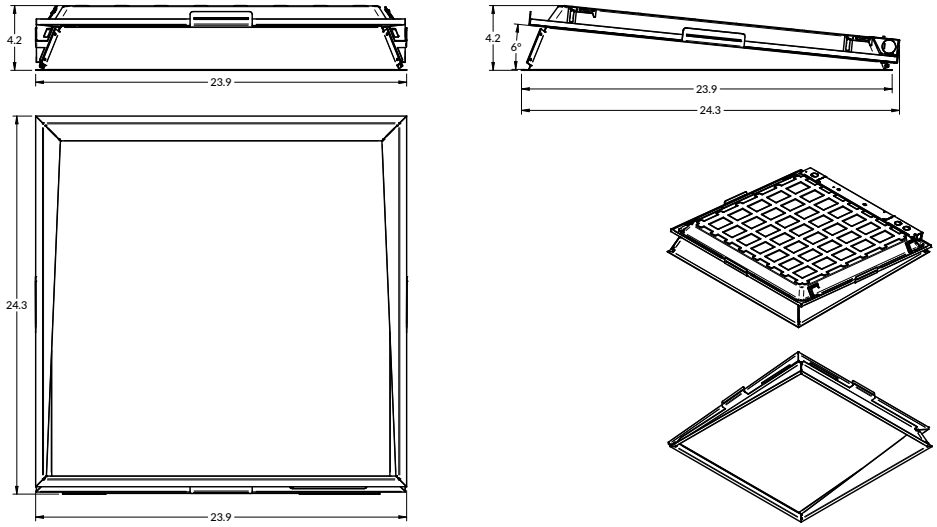

2x2 Dimensions with LJB (Large Junction Box)

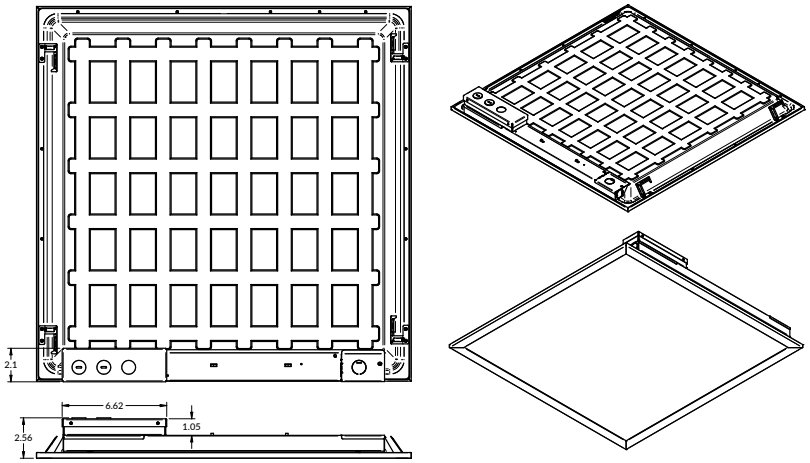

2x4 SLMK Skylight Mount Kit

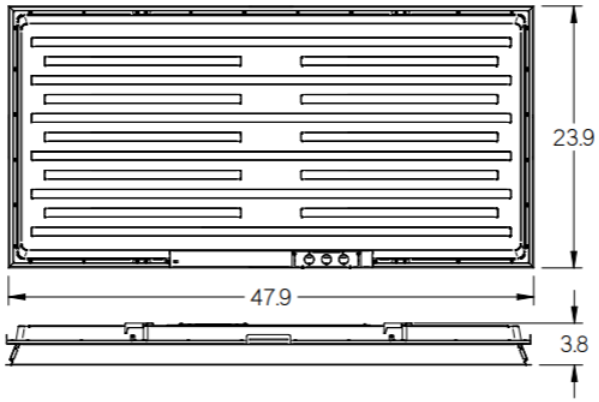

2x4 SEK Suspended Enclosure

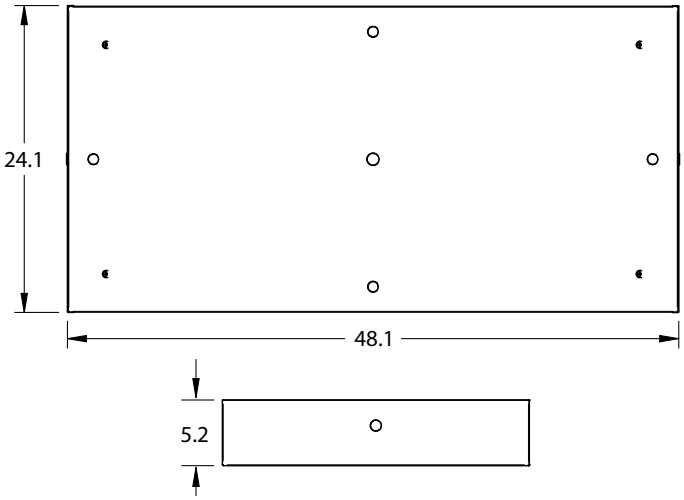

 © 2025 Copyright Industrial Lighting Products. All Rights Reserved.

LINE DRAWINGS (Continued)

2x4 Flange Kit

Ceiling opening is 24.25" x 48.25"

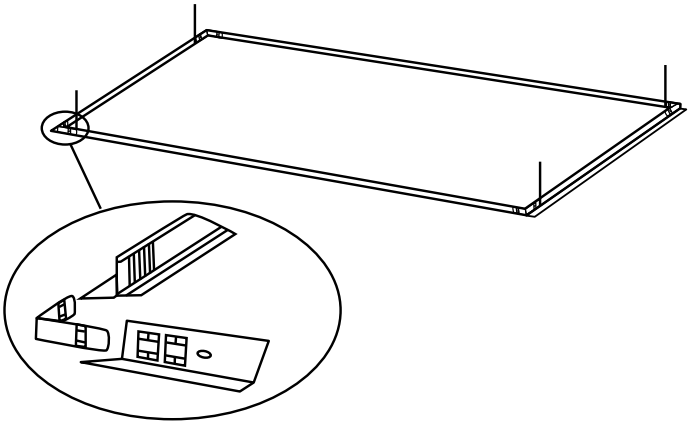

2x4 w/ EM

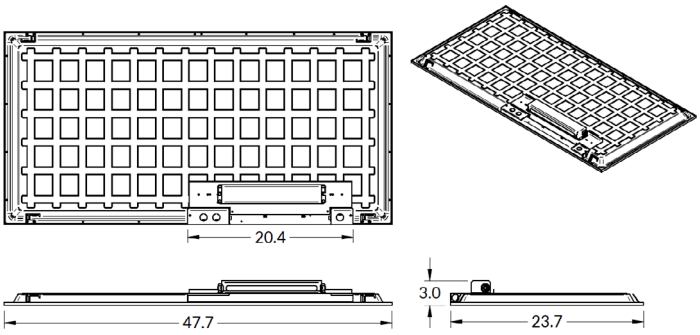

2x4 w/ SM Surface Mount Kit

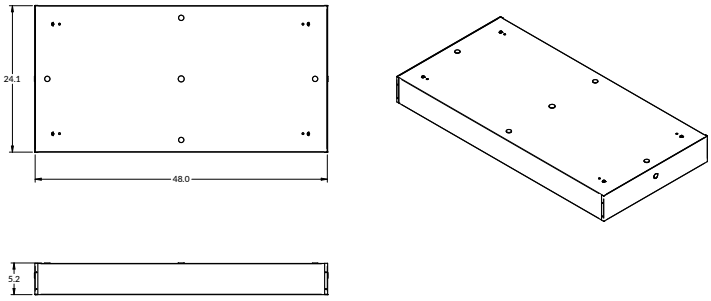

2x4 w/ SMSK Surface Mount Skirt Kit

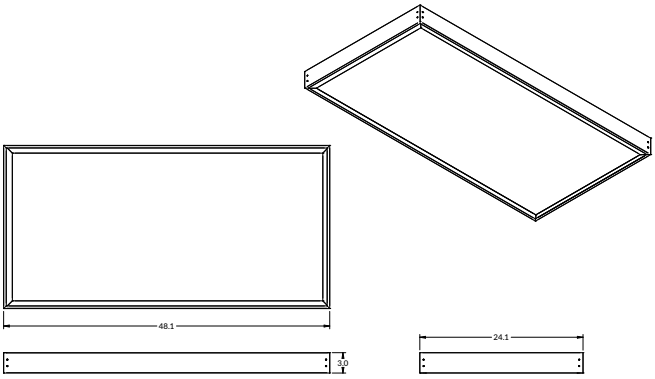

 © 2025 Copyright Industrial Lighting Products. All Rights Reserved.

PHOTOMETRIC DATA

LUMINAIRE DATA	
Part Number	VPAN14-44L-U-40
Description	Selectable Flat Panel, 1x4, 4400lm, 4000K
Fixture Lumens (lm)	5,503 lm
Wattage (W)	38.4 W
Efficacy (lm/W)	143 lm/W
Mounting	Recessed

ZONAL LUMEN SUMMARY		
Zone	Lumens (lm)	% Fixture
0° - 40°	3,193	58%
0° - 60°	4,850	88%
0° - 90°	5,503	100%
90° - 180°	0	0%
0° - 180°	5,503	100%

CANDELA PLOT

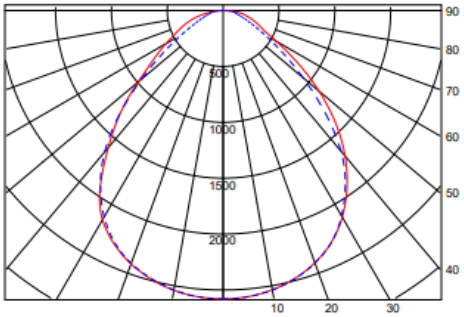

Totally Asymmetric Solid: 180-0 Degrees Dashed: 270-90 Degrees

LUMINAIRE DATA	
Part Number	VPAN22-44L-U-40
Description	Selectable Flat Panel, 2x2, 4400lm, 4000K
Fixture Lumens (lm)	5,240 lm
Wattage (W)	37.9 W
Efficacy (lm/W)	138 lm/W
Mounting	Recessed

ZONAL LUMEN SUMMARY		
Zone	Lumens (lm)	% Fixture
0° - 40°	3,019	58%
0° - 60°	4,630	88%
0° - 90°	5,240	100%
90° - 180°	0	0%
0° - 180°	5,240	100%

CANDELA PLOT

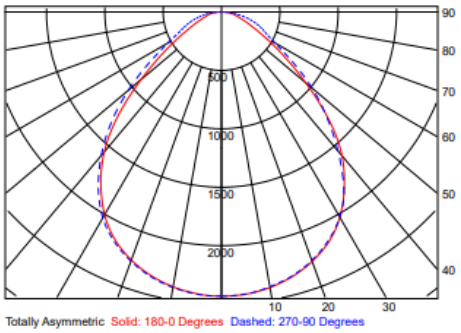

Totally Asymmetric Solid: 180-0 Degrees Dashed: 270-90 Degrees

LUMINAIRE DATA	
Part Number	VPAN24-55L-U-40
Description	Selectable Flat Panel, 2x4, 5500lm, 4000K
Fixture Lumens (lm)	6,465 lm
Wattage (W)	47.8 W
Efficacy (lm/W)	135 lm/W
Mounting	Recessed

ZONAL LUMEN SUMMARY		
Zone	Lumens (lm)	% Fixture
0° - 40°	2,861	44%
0° - 60°	5,091	79%
0° - 90°	6,465	100%
90° - 180°	0	0%
0° - 180°	6,465	100%

CANDELA PLOT

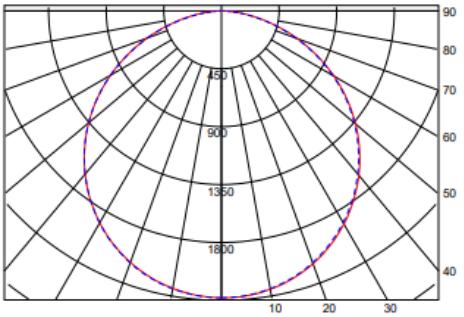

Totally Asymmetric Solid: 180-0 Degrees Dashed: 270-90 Degrees

LUMINAIRE DATA	
Part Number	VPAN24-80L-U-40
Description	Selectable Flat Panel, 2x4, 8000lm, 4000K
Fixture Lumens (lm)	7,914 lm
Wattage (W)	55.9 W
Efficacy (lm/W)	142 lm/W
Mounting	Recessed

ZONAL LUMEN SUMMARY		
Zone	Lumens (lm)	% Fixture
0° - 40°	3,503	44%
0° - 60°	6,230	79%
0° - 90°	7,914	100%
90° - 180°	0	0%
0° - 180°	7,914	100%

CANDELA PLOT

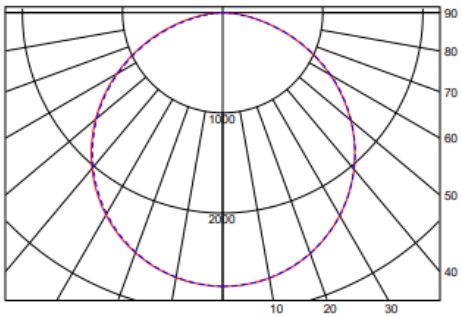

Totally Asymmetric Solid: 180-0 Degrees Dashed: 270-90 Degrees

 © 2025 Copyright Industrial Lighting Products. All Rights Reserved.