NHBL Series

NSF LED Linear Highbay

Model: _____ Date: _____

Accessories: _____

Job Name: _____ Type: _____

DESCRIPTION

Designed with a durable die-cast aluminum housing with an impact-resistant IK10 rated polycarbonate lens and a high operating temperature up to 65°C (149°F), this highbay is built to last. There are three power switchable configurations available, offering flexibility between 14,600 - 25,000 lumens (150W), 32,100-42,050 lumens (255W) and 33,600 - 49,000 lumens (300W), and CCT options between 3500K, 4000K, and 5000K. The easily accessible switches allow for quick adjustments, maximizing performance with an outstanding efficacy of up to 170 lumens per watt. Tested for the harshest conditions, the NHBL is cULus Listed for Wet Locations, NEMA 4X rated, NSF certified, and IP69K rated, making it ideal for food processing, industrial, and outdoor environments. With DLC 6.0 PREMIUM qualification, this highbay ensures high performance and reliability in any setting.

SPECIFICATIONS

Construction:

- Robust die-cast aluminum housing in a white finish
- IK10 Rated polycarbonate lens
- IK07 Rated glass lens accessory available
- Built in receptacle on the front panel for easy plug and play sensor installation
- 6' Three conductor whip for building power supply
- 6' Four conductor whip for 0-10V dimming wires and emergency input
- Comes standard with 6' aircraft mounting cable

Optics/LEDs:

- Polycarbonate lens (IK10 Rated) offered with an optical lens providing a 90° distribution
- Glass lens (IK07 Rated) accessory with an optical lens providing a 110° distribution
- CCT Switchable between 3500K, 4000K and 5000K
- Power Switchable:
  - 150W (14,600 - 25,000 lumens)
  - 255W (32,100 - 42,050 lumens)
  - 300W (33,600 - 49,000 lumens)
- Switches easily accessible on top of fixture under coin plug cover
- Efficacy up to 170lm/w
- CRI >80

Electrical:

- Universal 120-347VAC, 50/60Hz, 277-480VAC option available
- Power Factor > 0.90
- 0-10V Dimming driver
- Built-in drive surge protection L/N-PE: 6kV, L-N: 6kV

Installation:

- 6' Cable mount kit included for suspension mount
- 10' Adjustable cable mount kit available, (NHBL-CTY10; non NSF rated)
- AUX sensor receptacle built in the central front of fixture
- Can be surface or stem/pendant mounted with the use of the surface mount kits (NHBL-SMK-SM, NHBL-SMK-LG; non NSF rated), pendant mount will require weatherproof junction box and 3/4" downrod provided by others

Accessories:

- Plug and Play Occupancy Sensors - receptacle built on the central front panel (Operating temperature of -30°C to 60°C (-22°F to 140°F) with sensor installed)
  - Dimming occupancy sensor, PIR, with daylight harvesting capabilities, 3.5mm AUX port (TL-MSP12)
  - Litelogic Wireless Bluetooth PIR Sensor with daylight harvesting capabilities, 12VDC, 3.5mm AUX port (LE-MS3-AUX-HB1)
- Remote for TL-MSP12 occupancy sensor (TL-MSSW-REMOTE)
- 25W External battery backup (120-347VAC) accessory delivers 3,950 lumens for 90 minutes of emergency powered illumination. Rated for temperatures of 0°C to 60°C (32°F to 140°F) (NHBL-BB)
- IK07 Rated glass lenses with 110° beam angle (NHBL-GLSM, NHBL-GLLG)
- Surface mount brackets allow for surface or pendant mount installation (NHBL-SMK-SM, NHBL-SMK-LG; non NSF rated)
- 10' Adjustable cable mount kit available, (NHBL-CTY10; non NSF rated)

Specs at a Glance			
Model	NHBL-150	NHBL-255	NHBL-300
Length	1.4'	2'	2'
Wattage (W)*	90W-130W-150W Switchable	200W-220W-255W Switchable	210W-270W-300W Switchable
Lumens (lm)	14,600 - 25,000	32,100 - 42,050	33,600 - 49,000
Efficacy (LPW)	Up to 170		
CCT (K)	3500K-4000K-5000K Switchable		
CRI	≥80		
Input Voltage	120-347VAC, 50/60Hz, 277-480VAC, 50/60Hz	277-480VAC, 50/60Hz	120-347VAC, 50/60Hz
Operating Temp	-40°C to 65°C (-40°F to 149°F)		
Certifications	cULus Listed for Wet Locations, IP69K, NSF, NEMA4X, IK10 DLC 6.0 PREMIUM		
Warranty	5 Years		

* Nominal Wattage. Tested at 3500K CCT. Efficacy at 158Lm/W.
Note: Environment and application will affect performance. Typical values and 25°C used for testing. Specifications subject to change without notice.

Testing & Compliance:

- cULus Listed for Wet Locations
- NEMA 4X Rated
- NSF Certified for food equipment, rated for Food Zone, Splash Zone and Non Food Zone
- IP69K Rated
- DesignLights Consortium® (DLC) 6.0 PREMIUM Qualified (consult QPL for qualified models)
- Operating temperatures: -40°C to 65°C (-40°F to 149°F)

Warranty:

- Five Year Warranty (Terms and Conditions Apply)

Ordering Information (Example: NHBL-150-VS-CP-P-WH)

Series	Description
NHBL-150-VS-CP-P-WH	NSF Linear LED Highbay, Power Switchable 90W/130W/150W, Color Switchable 3500K/4000K/5000K CCT, 120-347VAC, 0-10V Dimming, Polycarbonate Lens, AUX Sensor Receptacle, White Finish
NHBL-150-HVS-CP-P-WH	NSF Linear LED Highbay, Power Switchable 90W/130W/150W, Color Switchable 3500K/4000K/5000K CCT, 277-480VAC, 0-10V Dimming, Polycarbonate Lens, AUX Sensor Receptacle, White Finish
NHBL-255-HVS-CP-P-WH	NSF Linear LED Highbay, Power Switchable 200W/220W/255W, Color Switchable 3500K/4000K/5000K CCT, 277-480VAC, 0-10V Dimming, Polycarbonate Lens, AUX Sensor Receptacle, White Finish
NHBL-300-VS-CP-P-WH	NSF Linear LED Highbay, Power Switchable 210W/270W/300W, Color Switchable 3500K/4000K/5000K CCT, 120-347VAC, 0-10V Dimming, Polycarbonate Lens, AUX Sensor Receptacle, White Finish

LiteLogic Sensor Accessories[1] (Field Installed, Order as Separate Line Item)	**Accessories**[1] (Field Installed, Order as Separate Line Item)
LE-MS3-AUX-HB1[2] = Bluetooth Enabled Dimming Occupancy Sensor, PIR	NHBL-BB[2,3] = 25W Battery Backup Kit
TL-MSP12 = Dimming Occupancy Sensor, PIR	NHBL-GLSM = Glass Lens Kit for NHBL-150
TL-MSSW-REMOTE = Remote for Dimming Sensor Accessory (TL-MSP12)	NHBL-GLLG = Glass Lens Kit for NHBL-255 & NHBL-300
	NHBL-SMK-SM[4] = Surface Mount Kit for NHBL-150
	NHBL-SMK-LG[4] = Surface Mount Kit for NHBL-255 & NHBL-300
	NHBL-CTY10[4] = 10' Adjustable Cable Mount Kit w/Integral Y-toggles (Pack of 2)

Notes

[1] Order as separate line item

[2] Unit rating is IP65 with use of sensors or battery backup

[3] Only for use with 120-347VAC power sources, including VS configurations and HVS configurations using 277-347VAC power

[4] Unit is not NSF rated with this accessory installed, if NSF rating is required, use included 6' mounting cable

PERFORMANCE TABLE

Model	Wattage	CCT	Lumens	LPW
NHBL-150-VS-CP-P-WH (90W, 3500K, polycarbonate lens)	90W	3500K	14,600	162
NHBL-150-VS-CP-P-WH (90W, 4000K, polycarbonate lens)	90W	4000K	15,300	170
NHBL-150-VS-CP-P-WH (90W, 5000K, polycarbonate lens)	90W	5000K	14,700	163
NHBL-150-VS-CP-P-WH (130W, 3500K, polycarbonate lens)	130W	3500K	21,610	166
NHBL-150-VS-CP-P-WH (130W, 4000K, polycarbonate lens)	130W	4000K	22,100	170
NHBL-150-VS-CP-P-WH (130W, 5000K, polycarbonate lens)	130W	5000K	21,460	165
NHBL-150-VS-CP-P-WH (150W, 3500K, polycarbonate lens)	150W	3500K	24,384	162
NHBL-150-VS-CP-P-WH (150W, 4000K, polycarbonate lens)	150W	4000K	25,290	169
NHBL-150-VS-CP-P-WH (150W, 5000K, polycarbonate lens)	150W	5000K	24,500	163
NHBL-255-HVS-CP-P-WH (200W, 3500K, polycarbonate lens)	200W	3500K	32,100	161
NHBL-255-HVS-CP-P-WH (200W, 4000K, polycarbonate lens)	200W	4000K	33,560	168
NHBL-255-HVS-CP-P-WH (200W, 5000K, polycarbonate lens)	200W	5000K	32,860	164
NHBL-255-HVS-CP-P-WH (220W, 3500K, polycarbonate lens)	220W	3500K	35,140	160
NHBL-255-HVS-CP-P-WH (220W, 4000K, polycarbonate lens)	220W	4000K	36,900	168
NHBL-255-HVS-CP-P-WH (220W, 5000K, polycarbonate lens)	220W	5000K	35,800	163
NHBL-255-HVS-CP-P-WH (255W, 3500K, polycarbonate lens)	255W	3500K	38,800	152
NHBL-255-HVS-CP-P-WH (255W, 4000K, polycarbonate lens)	255W	4000K	42,050	165
NHBL-255-HVS-CP-P-WH (255W, 5000K, polycarbonate lens)	255W	5000K	40,550	159
NHBL-300-VS-CP-P-WH (210W, 3500K, polycarbonate lens)	210W	3500K	33,600	160
NHBL-300-VS-CP-P-WH (210W, 4000K, polycarbonate lens)	210W	4000K	34,700	165
NHBL-300-VS-CP-P-WH (210W, 5000K, polycarbonate lens)	210W	5000K	34,000	162
NHBL-300-VS-CP-P-WH (270W, 3500K, polycarbonate lens)	270W	3500K	43,000	159
NHBL-300-VS-CP-P-WH (270W, 4000K, polycarbonate lens)	270W	4000K	44,500	165
NHBL-300-VS-CP-P-WH (270W, 5000K, polycarbonate lens)	270W	5000K	43,500	161
NHBL-300-VS-CP-P-WH (300W, 3500K, polycarbonate lens)	300W	3500K	47,854	159
NHBL-300-VS-CP-P-WH (300W, 4000K, polycarbonate lens)	300W	4000K	50,580	169
NHBL-300-VS-CP-P-WH (300W, 5000K, polycarbonate lens)	300W	5000K	49,700	166

SAMPLE PHOTOMETRY

NHBL-300-VS-CP-P-WH (300W, 3500K)
IES: TYPE VS Very Short
MOUNTING HEIGHT: **20'**
TILT: ZERO
HORIZONTAL SPACING CRITERIA: 1.28

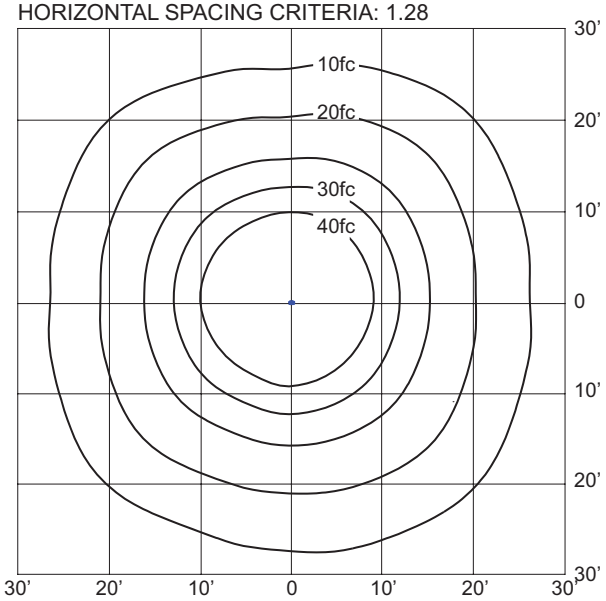

DIMENSIONS

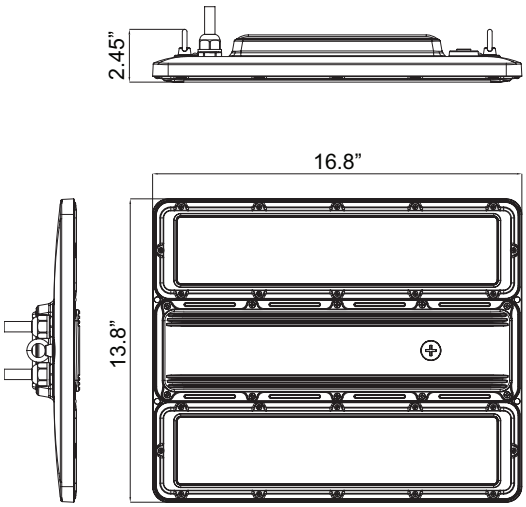

NHBL-150

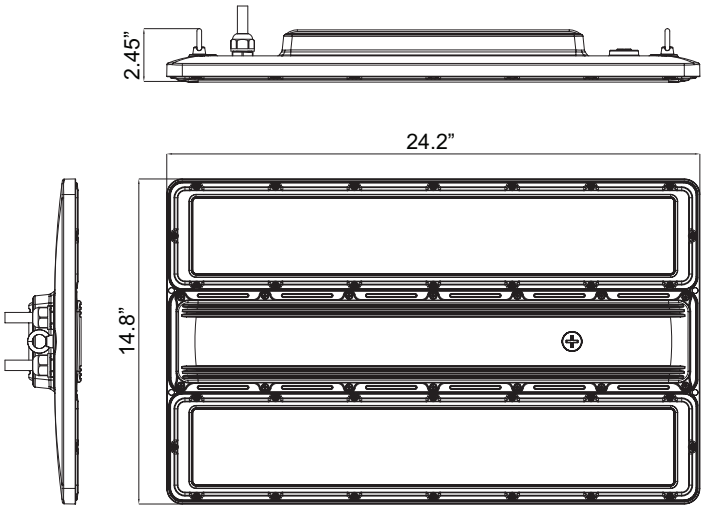

NHBL-255 & NHBL-300

LE-MS3-AUX SENSOR DETAILS (BLUETOOTH ENABLED) Click For Sensor Details

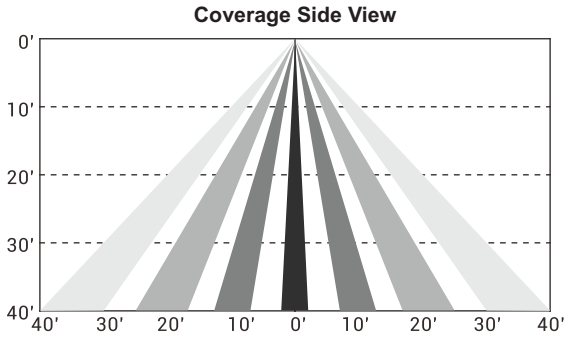

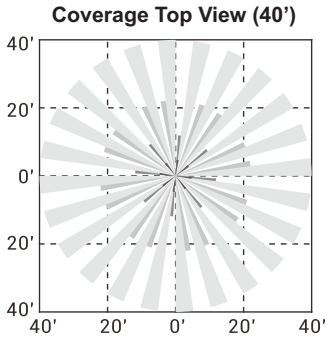

SEE APP FOR SENSOR SETTINGS

For a complete list of ***litelogic*** compatible products, click here.

litelogic LIGHTING CONTROLS

Get it from the **App Store**

Get it from **Google Play**

Note: Bluetooth sensor controls do not allow for CCT selection using the app. CCT must be manually selected on the fixture.

TL-MSP12 SENSOR DETAILS

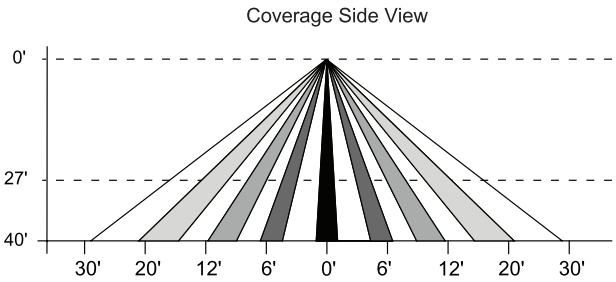

360° Coverage

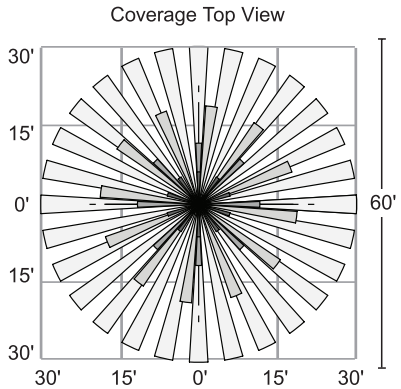

TLMSP12 SENSOR SETTINGS (TL-MSSW-REMOTE)

DETECTION RADIUS/ANGLE	MAX 60'/360°
MOUNTING HEIGHT	MAX 40'
REMOTE RANGE	MAX 33'
FREQUENCY	5.8 GHz
HIGH MODE	70%, 80%, 90%, 100% (DEFAULT 100%)
SENSITIVITY	20%, 50%, 75%, 100% (DEFAULT 100%)
HOLD TIME	10sec, 1min, 5min, 10min, 15min, 20min, 30min, 60min (DEFAULT 5min)
DAYLIGHT HARVESTING	, , 10Lux, 30Lux, 50Lux, 100Lux, 300Lux, 500Lux (DEFAULT disabled)
STANDBY DIM SETTING	0%, 10%, 30%, 50% (DEFAULT 30%)
STANDBY TIME SETTING (TO OFF)	, 1min, 30min, 60min (DEFAULT 30min)

TL-MSSW-REMOTE
(Sold Separately)

SURFACE MOUNT KIT ACCESSORY (NHBL-SMK-SM, NHBL-SMK-LG)

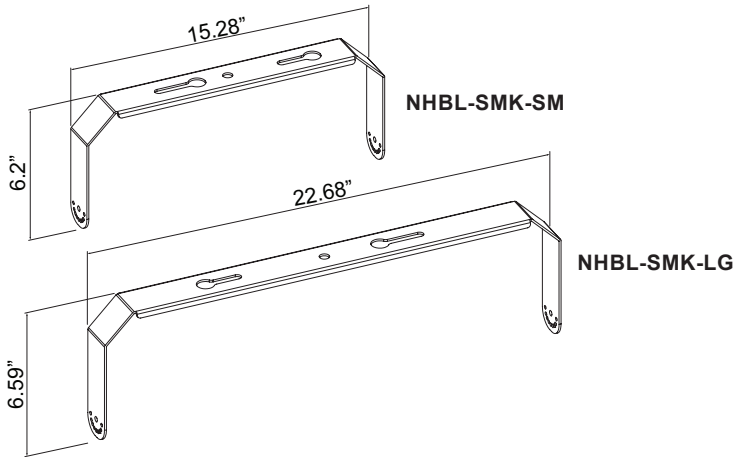

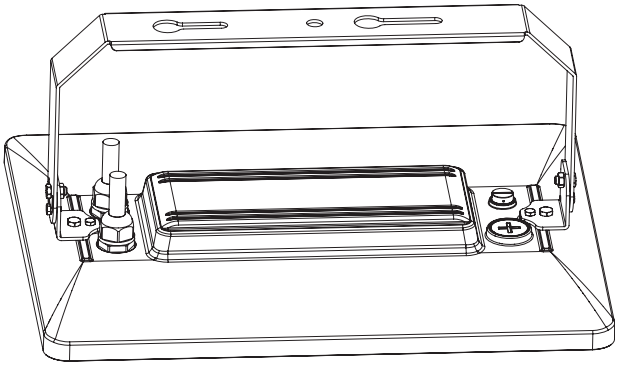
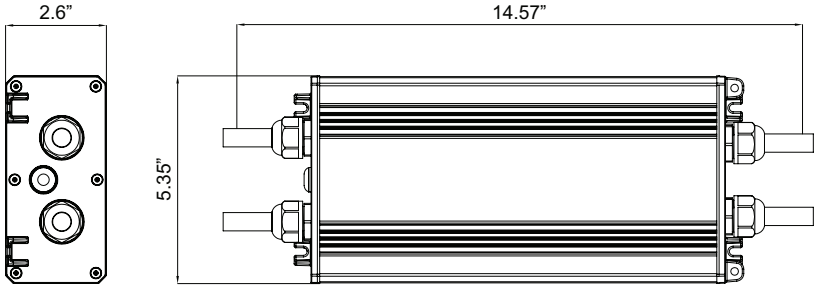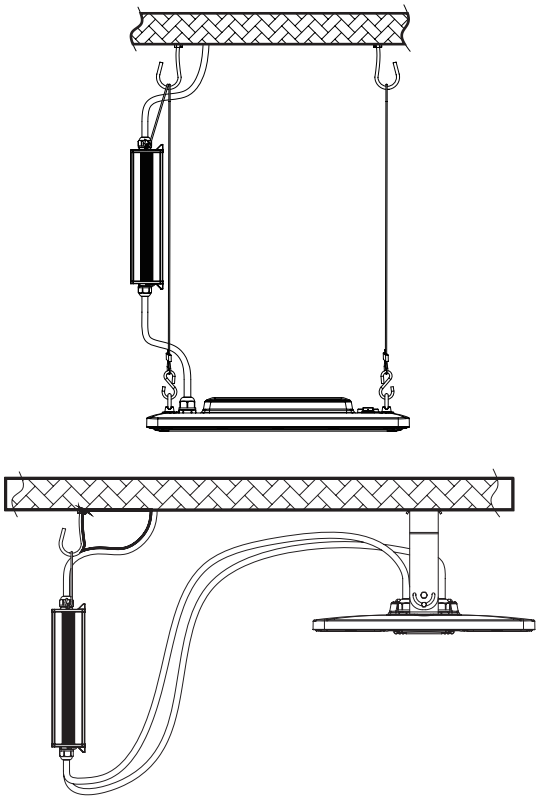
BATTERY BACKUP ACCESSORY (NHBL-BB)